Home of the Tualatin River National Wildlife Refuge

SW Arrow Street Extension

DATE March 28, 2025 **ADDENDUM NO. 2**

Addition/Change to the Contract Documents
The work provided for in this addendum shall become a part of the drawings and specifications for this project.

1. A picture has been attached showing the trench for the sanitary sewer installation through the SW Arrow Street right-of-way in the location of this project.
2. Bid item# 12 "Pavement Overlay Fabric" is by the foot. Please see sheet 2A and 2B-6 of the bid plans for location and usage.
3. Section 00180.50(h) has the completion date for the project as August 1, 2025. This section is hereby modified to allow for street light pole installation later than the August 1 date in case of material shipping delays.
4. Bid Schedule Bid Item #18 (Concrete Manholes, Standard) has been modified to have a bid quantity of 2 Each. A new Bid Schedule is hereby attached to this addendum. Contractors shall use new bid schedule when providing bid.
5. Street signage will be performed by the City of Sherwood including the relocation of sign 5 on sheet SS-7.
6. Base rock beneath sidewalks and sidewalk ramps shall be of 4" of thickness. Revised details RD-26, RD-42, RD-43 and RD-44 have been included.
7. Bid Schedule Bid Item #10 (Subgrade Stabilization) is a speculative quantity and can only be used when authorized by the City Project Manager due to poor subgrade soils. The quantity of this bid item has been modified to 130 cubic yards. A new Bid Schedule is hereby attached to this addendum. Contractors shall use new bid schedule when providing bid.

This ADDENDUM shall be signed and attached to the Bidder's Proposal and shall subsequently become part of the Contract Documents.

Company Name	
Contractor Name	
Contractor Signature	
Date	

REVISED BID SCHEDULE – ADDENDUM #2
SW ARROW STREET EXTENSION

Item No.	Spec Section	Description	Unit	Quantity	Unit Price	Unit Total Cost
PART 00200 -- TEMPORARY FEATURES AND APPURTENANCES						
1	00210	Mobilization	LS	1		
2	00221	Temporary Work Zone Traffic Control, Complete	LS	1		
3	00280	Erosion Control	LS	1		
PART 00300 – ROADWORK						
4	00305	Construction Survey Work	LS	1		
5	00310	Removal of Structures and Obstructions	LS	1		
6	00310	Removal of Inlets	EA	1		
7	00310	Asphalt Pavement Saw Cutting	FT	650		
8	00320	Clearing and Grubbing	LS	1		
9	00330	General Excavation	CY	1,600		
10	00331	Subgrade Stabilization	CY	130		
11	00350	Subgrade Geotextile	SY	3,100		
12	00350	Pavement Overlay Geotextile	FT	480		
13	00390	Riprap Basin (Class 200)	EA	1		
PART 00400 -- DRAINAGE AND SEWERS						
14	00415	Mainline Video Inspection	FT	972		
15	00445	12 inch Storm Sewer Pipe, PVC	FT	499		
16	00445	18 inch Storm Sewer Pipe, PVC	FT	26		
17	00445	21 inch Storm Sewer Pipe, PVC	FT	447		
18	00470	Concrete Manholes, Standard	EA	2		
19	00470	Concrete Manhole, CWS WQ Manhole	EA	1		
20	00470	Concrete Manholes, Flow Control/Diversion	EA	1		
21	00470	Concrete Inlets, Type CG-2	EA	3		
22	00470	Concrete Manhole, w/ Type CG-48 inlet	EA	1		
23	00470	Concrete Monument Boxes	EA	1		
24	00490	Connection to Existing Structures	EA	1		
25	00490	Minor Adjustment of Manholes	EA	1		
26	00490	Major Adjustment of Manholes	EA	1		
27	00490	Adjusting Boxes	EA	8		

REVISED BID SCHEDULE – ADDENDUM #2
SW ARROW STREET EXTENSION

Item No.	Spec Section	Description	Unit	Quantity	Unit Price	Unit Total Cost
PART 00600 – BASES						
28	00620	Cold Plane Pavement Removal, 2 inches Deep	SY	1,200		
29	00641	3/4 inch - 0 Aggregate Base	TN	690		
30	00641	1-1/2 Inch - 0 Aggregate Base	TN	1,700		
PART 00700 – WEARING SURFACES						
31	00744	Level 2, 1/2 inch ACP Mixture	TN	910		
32	00759	Concrete Curbs, Vertical Curb	FT	150		
33	00759	Concrete Curbs, Monolithic Curb and Gutter	FT	1,300		
34	00759	Concrete Driveway Approaches, Reinforced	SF	240		
35	00759	Concrete Walks	SF	7,900		
36	00759	Extra for Curb Ramps	EA	4		
37	00759	Truncated Domes on New Surfaces	SF	95		
PART 00800 – PERMANENT TRAFFIC SAFETY AND GUIDANCE DEVICES						
38	00855	Bi-Directional Yellow Type I Markers	EA	7		
39	00855	Mono-Directional White Type I Markers	EA	12		
40	00865	Thermoplastic, Extruded, Surface, Non-Profiled	FT	885		
41	00867	Pavement Bar, Type A	SF	157		
42	00867	Pavement Legend, Type AB-HS: Arrows	EA	4		
PART 00900 – PERMANENT TRAFFIC CONTROL AND ILLUMINATION SYSTEMS						
43	00905	Remove Existing Signs	LS	1		
44	00905	Remove and Reinstall Existing Signs	LS	1		
45	00970	Pole Foundations, Precast	LS	1		
46	00970	Lighting Poles and Arms	LS	1		
47	00970	Luminaires, Lamps, and Ballasts	LS	1		
48	00970	Switching, Conduit, and Wiring	LS	1		
PART 01000 – RIGHT OF WAY DEVELOPMENT AND CONTROL						
49	01012	Water Quality Manhole, Cartridge	LS	1		
50	01015	Underground Detention System	LS	1		
51	01030	Yard Restoration	LS	1		
TOTAL BID						

BID WRITTEN IN WORDS:

_____ DOLLARS AND _____ CENTS

In the event of discrepancy, the amount in words shall dictate.

In accordance with the provisions of the Oregon Standard Specifications for Construction, 2021 Edition as modified by these bid documents, the undersigned Bidder submits the following Bid Schedule with the understanding that City reserves the right to increase, decrease, or completely eliminate quantities as set forth in 00120.20. Also, the Bidder offers to do the work, whether quantities area changed (increased or decreased) in accordance with 00195.20, or not changed, at the unit rate price stated in the following Bid Schedule:

_____	_____
Signature of Authorized Agent	Company Name
_____	_____
Printed Name	Date

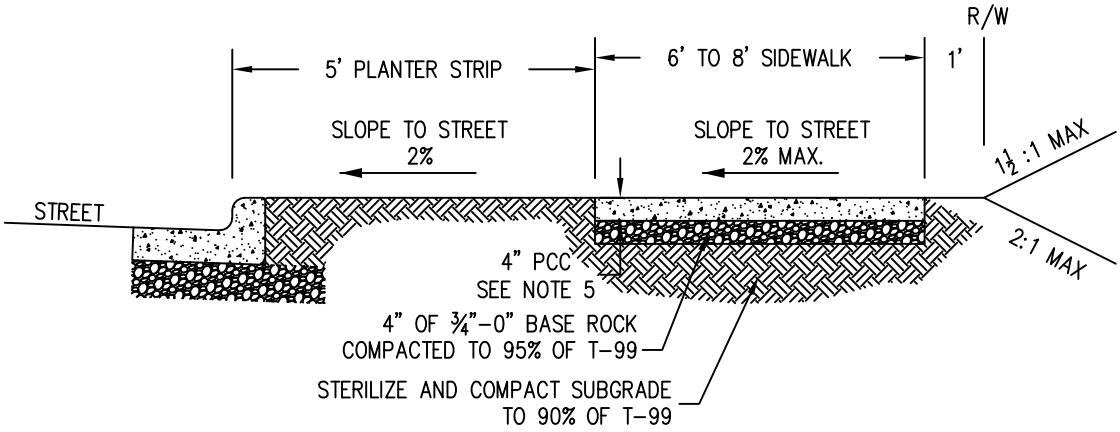

SIDEWALK WITH PLANTER STRIP
(FOR ALL NEW CONSTRUCTION)

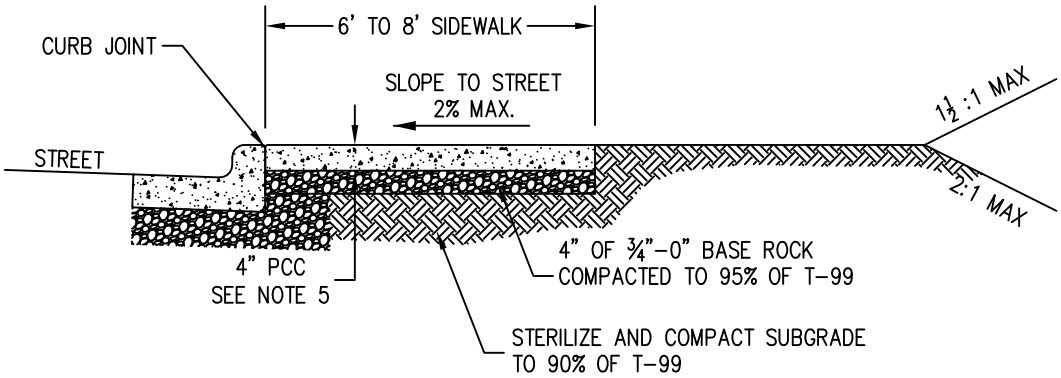

CURB-TIGHT SIDEWALK
(TO BE USED WITH VARIANCE ONLY)

NOTES:

1. CONCRETE SHALL BE COMMERCIAL MIX, MIN. COMPRESSIVE STRENGTH OF 3,300 PSI @ 28 DAYS, WITH A 4" MAX SLUMP.
2. SIDEWALK PANELS TO BE SQUARE (6' LONG x 6' WIDE TYP.).
3. EXPANSION JOINTS TO BE PLACED AT SIDES OF DRIVEWAY APPROACHES, UTILITY VAULTS, CURB RAMPS, AND/OR POINTS OF TANGENCY IN CURB AS SHOWN ON THE STANDARD DRAWINGS FOR SIDEWALK RAMPS, AND AT SPACING NOT TO EXCEED 45'.
4. FOR SIDEWALKS ADJACENT TO THE CURB AND POURED AT THE SAME TIME AS THE CURB, THE JOINT BETWEEN THEM SHALL BE A TROWELED JOINT WITH A MINIMUM ½" RADIUS.
5. SIDEWALKS SHALL HAVE A MINIMUM THICKNESS OF 4". IF MOUNTABLE CURB IS USED, OR IF SIDEWALK IS INTENDED AS PORTION OF A RESIDENTIAL DRIVEWAY IT SHALL HAVE A 6" MINIMUM THICKNESS, COMMERCIAL 8".
6. CONCRETE SHALL HAVE A BROOM FINISH, ALL JOINTS SHALL BE EDGED WITH 3" SHINE.
7. WIDTH OF PLANTER STRIP IS MEASURED FROM FACE OF CURB.
8. IF DRAIN BLOCKOUTS IN CURBS ARE APPROVED, THEY SHALL BE EXTENDED PERPENDICULAR TO CURB TO 1' PAST BACK OF SIDEWALK WITH A 3" DIAMETER ADS PIPE. CONTRACTION JOINT SHALL BE PLACE OVER PIPE.

City of Sherwood Oregon	STANDARD DRAWING TITLE		DRAWING NUMBER
	SIDEWALK DETAIL		RD-26
Any alteration of this drawing may not be associated in any way with the City of Sherwood Standard Drawings.		SCALE	REVISION DATE
		N.T.S.	2023.03.17

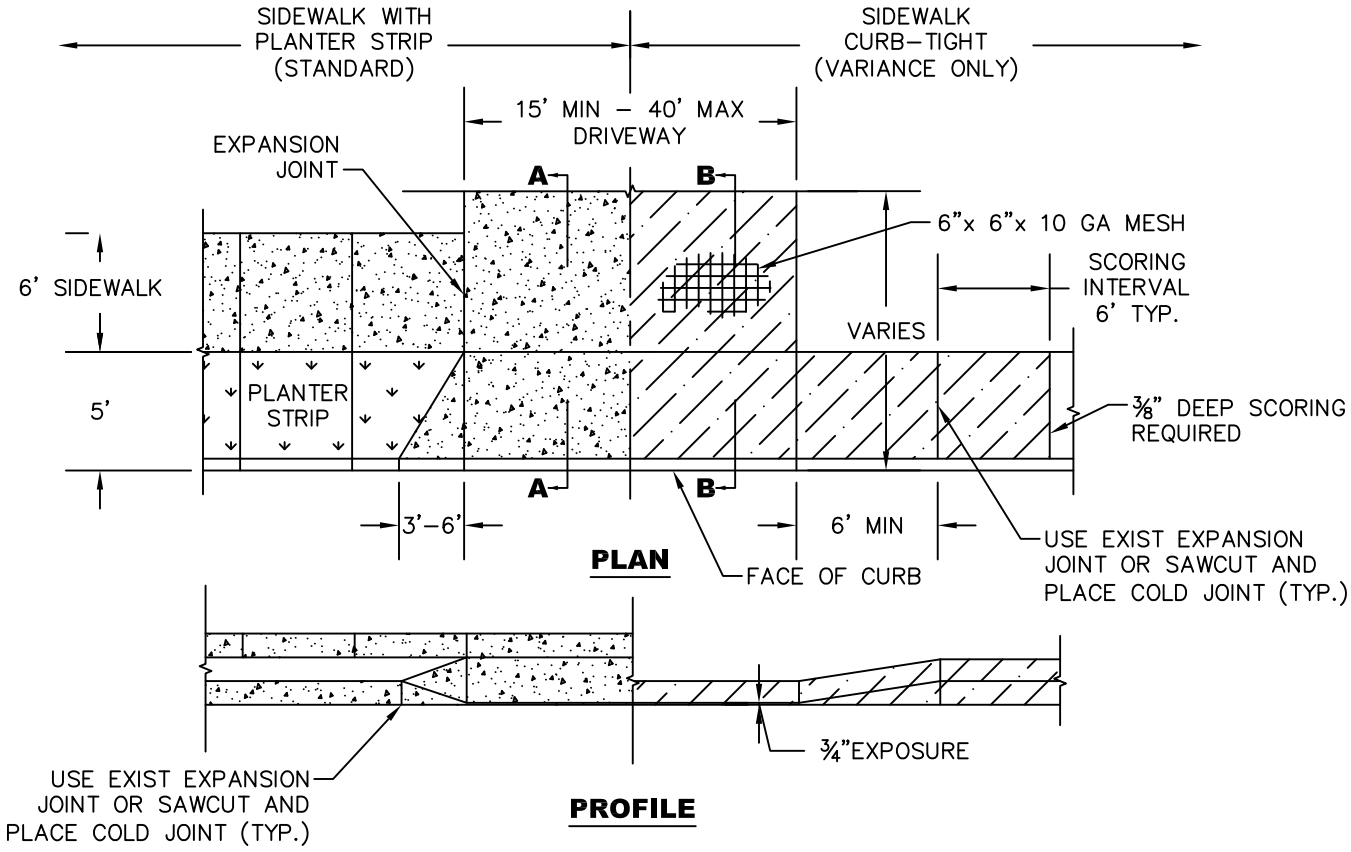

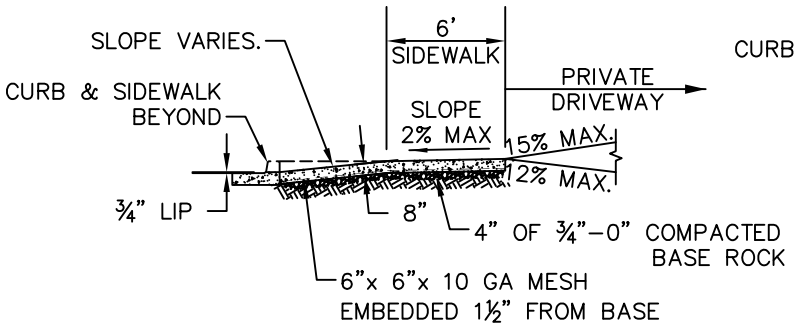

SECTION A-A

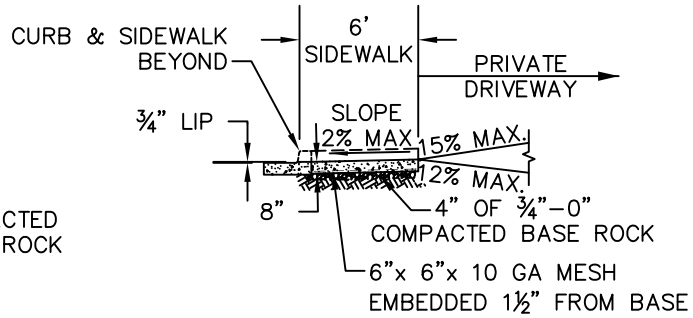

SECTION B-B

NOTES:

1. CONCRETE SHALL HAVE 8" MINIMUM DEPTH AND A COMPRESSIVE STRENGTH OF 4000 PSI @ 28 DAYS.
2. ¾"–0" BASE ROCK SHALL BE COMPACTED TO 95% OF T–180.
3. CURB JOINT SHALL BE A TROWELED JOINT WITH A MINIMUM ½" RADIUS ALONG BACK OF CURB.
4. EXPANSION JOINTS SHALL BE ½" PRE–MOLDED ASPHALT IMPREGNATED MATERIAL EXTENDING FROM TOP OF BASE ROCK TO FINISHED GRADE.
5. CONCRETE SHALL HAVE A BROOM FINISH AND EDGE ALL JOINTS.
6. WEEPHOLES ARE NOT TO BE PLACED IN WINGS.
7. IF CURBING IS BEING REMOVED TO INSTALL DRIVEWAY AND GUTTER SHOULD BECOME SEPARATED FROM THE DRIVING SURFACE IN EXCESS OF 1/16", THEN THE GUTTER SHALL ALSO BE REMOVED AND REPLACED.
8. WINGS OF THE COMMERCIAL DRIVEWAY WHICH ARE A PORTION OF THE SIDEWALK SHALL NOT EXCEED A SLOPE OF 8.33% (1:12).
9. ODOT STANDARD DRAWINGS FOR COMMERCIAL DRIVEWAYS MAY BE USED WHEN PRE–APPROVED BY CITY ENGINEER.
10. SLOPE OF THE DRIVEWAY MAY BE AWAY FROM THE CURB WHEN PRE–APPROVED BY THE CITY ENGINEER.

City of Sherwood Oregon	STANDARD DRAWING TITLE		DRAWING NUMBER
	COMMERCIAL DRIVEWAY DETAIL		RD-42
Any alteration of this drawing may not be associated in any way with the City of Sherwood Standard Drawings.		SCALE	REVISION DATE
		N.T.S.	2023.03.17

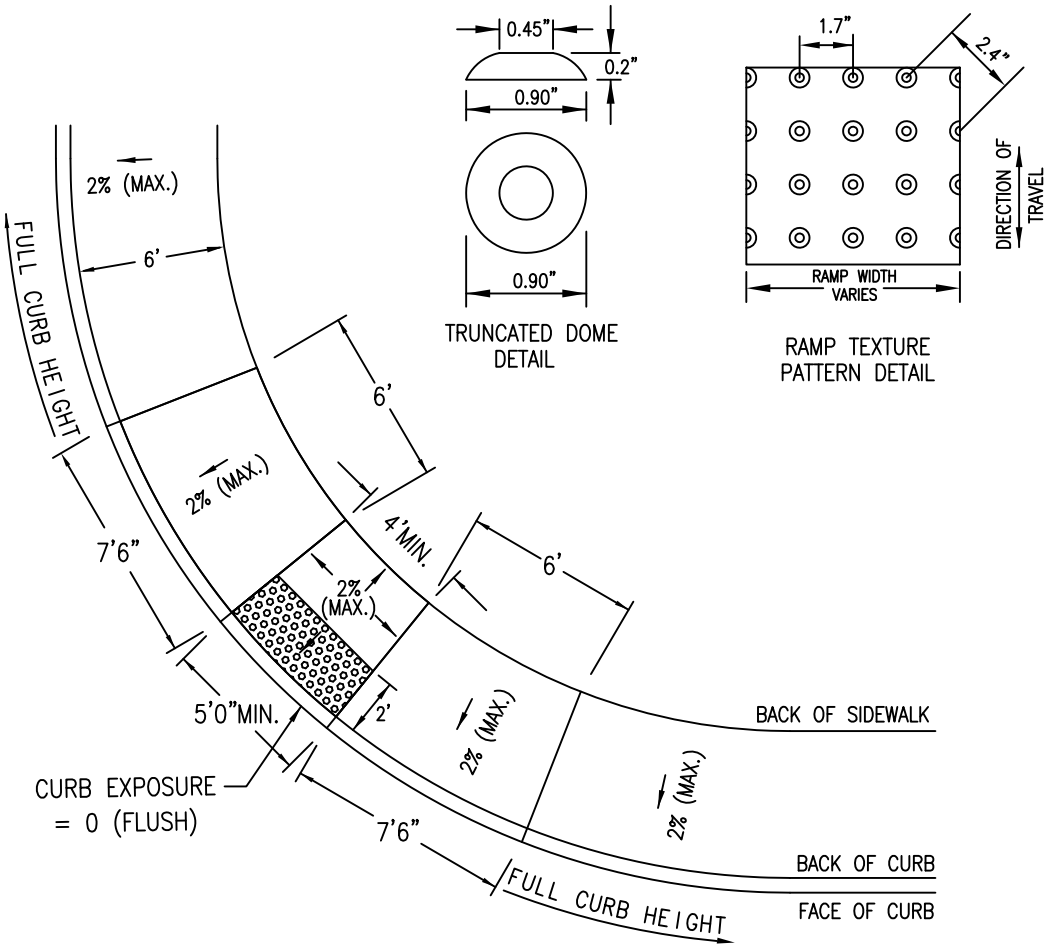

NOTES:

1. PROJECT ENGINEER SHALL USE THIS DRAWING AS A GUIDE FOR DESIGNING RAMPS AND SHALL PREPARE A SITE SPECIFIC DRAWING FOR EACH RAMP.
2. PROJECT ENGINEER SHALL VERIFY APPLICABILITY OF THIS DRAWING TO SPECIFIC LOCATIONS WITHIN THE PROJECT BEFORE USING IT AS A DESIGN GUIDE AND SHALL LOCATE EACH RAMP RELATIVE TO CROSSWALK OR STOP LINE.
3. SIDEWALK RAMP GRADES SHALL MEET CURRENT ADA STANDARDS.
4. DETECTABLE WARNING SHALL BE TRUNCATED DOME TYPE, 24" LONG IN DIRECTION OF TRAVEL AND FULL WIDTH OF RAMP, WITH DOMES ALIGNED ON A SQUARE GRID WITH ITS GRIDLINES PARALLEL AND PERPENDICULAR TO THE CENTERLINE OF THE RAMP. COLOR OF DETECTABLE WARNING SHALL BE SAFETY YELLOW.
5. CURB INLET OR CATCH BASIN SHALL NOT BE ALLOWED IN FRONT OF RAMP.
6. CONCRETE SHALL BE A COMMERCIAL MIX, WITH A 28 DAY DESIGN COMPRESSIVE STRENGTH OF 3300 PSI WITH A 4" MAX SLUMP.
7. ¾"–0" BASE ROCK SHALL BE COMPACTED TO 90% OF MAXIMUM DENSITY.
8. BEVEL THE CURB CUT FROM GUTTER TO BACK OF CURB AT 8.3% (1:12) MAX.
9. SCORE CONCRETE AT GRADE CHANGES, SURFACE TEXTURE CHANGES AND AT ALL OTHER POINTS SHOWN.
10. CONCRETE SURFACE SHALL HAVE BROOM FINISH, AND 3" EDGE (SHINE) ALL JOINTS.
11. PROJECT ENGINEER SHALL ACCEPT FULL RESPONSIBILITY FOR CORRECTING ALL UNACCEPTABLE RAMP CONSTRUCTION RESULTING FROM APPLYING THIS DRAWING "AS IS" AND NOT PROVIDING A SITE–SPECIFIC DRAWING FOR EACH RAMP.

City of Sherwood Oregon	STANDARD DRAWING TITLE		DRAWING NUMBER
	CURB-TIGHT CURB RETURN & RAMP DETAIL		RD-43
	Any alteration of this drawing may not be associated in any way with the City of Sherwood Standard Drawings.	SCALE	REVISION DATE
		N.T.S.	2024.05.15

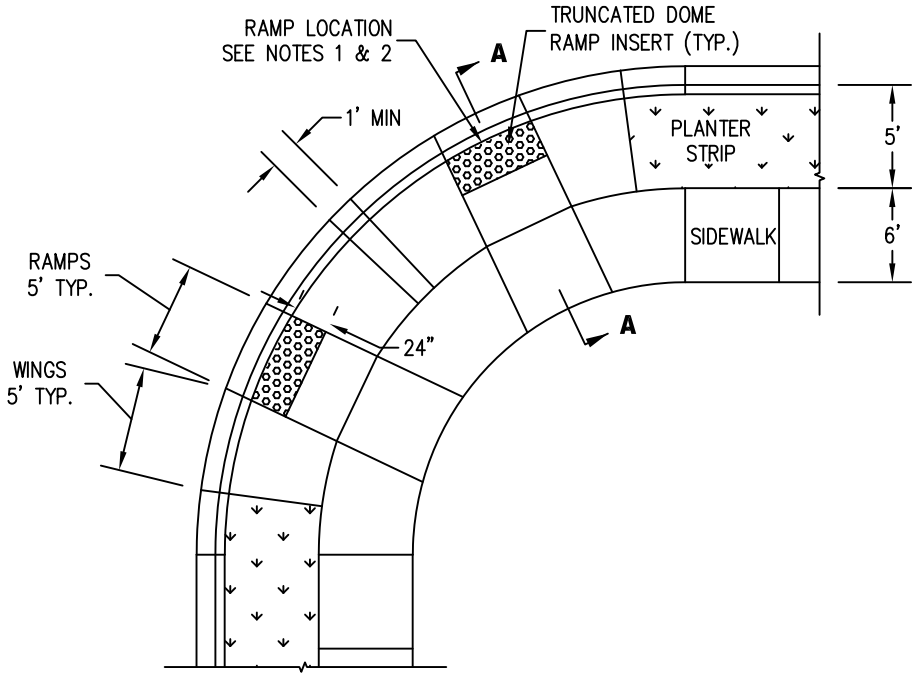

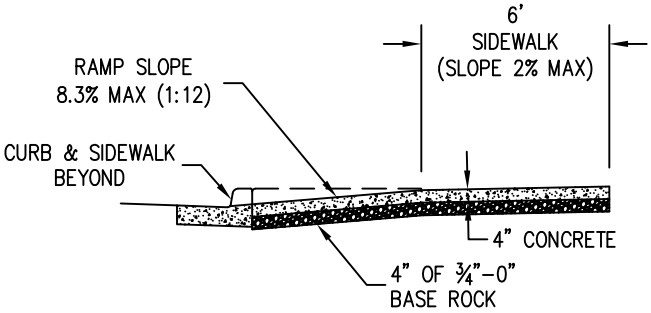

SECTION A-A

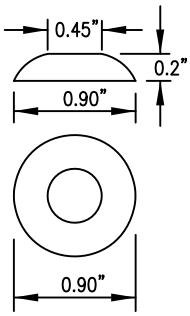

TRUCTICATED DOME
DETAIL

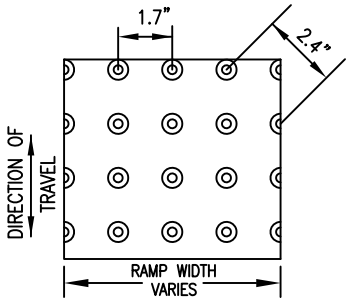

RAMP TEXTURE
PATTERN DETAIL

NOTES:

1. PROJECT ENGINEER SHALL USE THIS DRAWING AS A GUIDE FOR DESIGNING RAMPS AND SHALL PREPARE A SITE SPECIFIC DRAWING FOR EACH RAMP.
2. PROJECT ENGINEER SHALL VERIFY APPLICABILITY OF THIS DRAWING TO SPECIFIC LOCATIONS WITHIN THE PROJECT BEFORE USING IT AS A DESIGN GUIDE AND SHALL LOCATE EACH RAMP RELATIVE TO CROSSWALK OR STOP LINE.
3. SIDEWALK RAMP GRADES SHALL MEET CURRENT ADA STANDARDS.
4. DETECTABLE WARNING SHALL BE TRUNCATED DOME TYPE, 24" LONG IN DIRECTION OF TRAVEL AND FULL WIDTH OF RAMP, WITH DOMES ALIGNED ON A SQUARE GRID WITH ITS GRIDLINES PARALLEL AND PERPENDICULAR TO THE CENTERLINE OF THE RAMP. COLOR OF DETECTABLE WARNING SHALL BE SAFETY YELLOW.
5. CURB INLET OR CATCH BASIN SHALL NOT BE ALLOWED IN FRONT OF RAMP.
6. CONCRETE SHALL BE A COMMERCIAL MIX, WITH A 28 DAY DESIGN COMPRESSIVE STRENGTH OF 3300 PSI, WITH A 4" MAX SLUMP.
7. ¾"–0" BASE ROCK SHALL BE COMPACTED TO 90% OF MAXIMUM DENSITY.
8. BEVEL THE CURB CUT FROM GUTTER TO BACK OF CURB AT 8.3% (1:12) MAX.
9. SCORE CONCRETE AT GRADE CHANGES, SURFACE TEXTURE CHANGES AND AT ALL OTHER POINTS SHOWN.
10. CONCRETE SURFACE SHALL HAVE BROOM FINISH, AND 3" EDGE (SHINE) ALL JOINTS.
11. PROJECT ENGINEER SHALL ACCEPT FULL RESPONSIBILITY FOR CORRECTING ALL UNACCEPTABLE RAMP CONSTRUCTION RESULTING FROM APPLYING THIS DRAWING "AS IS" AND NOT PROVIDING A SITE–SPECIFIC DRAWING FOR EACH RAMP.

City of Sherwood Oregon	STANDARD DRAWING TITLE		DRAWING NUMBER
	DOUBLE CROSSING CURB RETURN & RAMP DETAIL		RD-44
	Any alteration of this drawing may not be associated in any way with the City of Sherwood Standard Drawings.	SCALE	REVISION DATE
		N.T.S.	2024.05.15