DEL BOCA VISTA SUBDIVISION

SEC. 31, T. 2 S., R. 1 W., W.M. - TAX LOT 201
CITY OF SHERWOOD
WASHINGTON COUNTY, OREGON

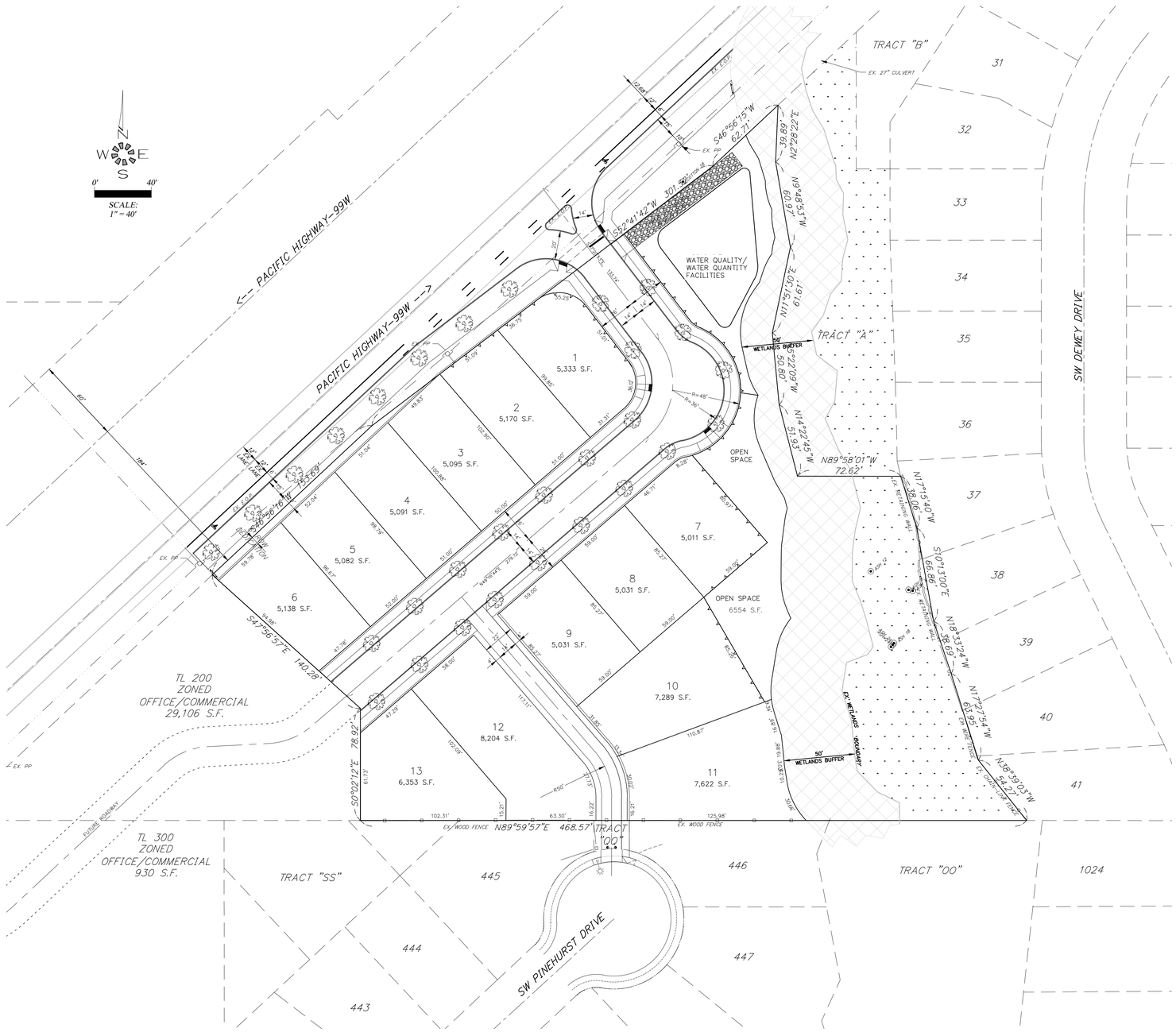

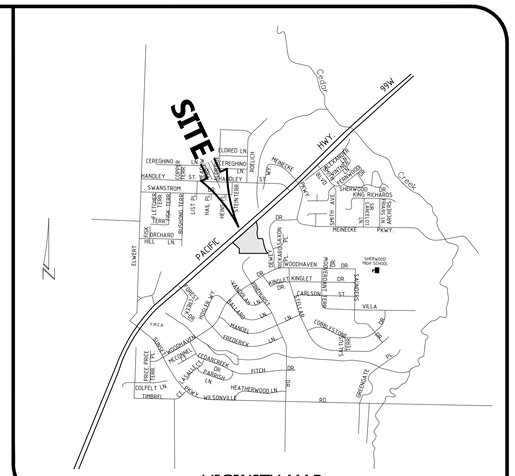
SITE
PACIFIC HWY.
99W
HENRIKE PKWY.
SHERWOOD HIGH SCHOOL
SW DEWEY DR.
SW PINEHURST DR.
SW KING RICHARDS
SW WILSONVILLE RD.
SW ELWERT
SW CEREGHINO LN.
SW HANDLEY ST.
SW SWANSTROM
SW ORCHARD HILL LN.
SW WOODHAVEN DR.
SW KINGLET DR.
SW CARLSON ST.
SW VILLA
SW HANDEL LN.
SW FREDERICK
SW CEDARCREST
SW FISTICH DR.
SW HEATHERWOOD LN.
SW COLFELT LN.
SW TIMBERLINE
SW GERDA LN.
SW SALTZMAN RD.
SW CHERRYWOOD
SW PINE PINE TERR.
SW SUNSET BLVD.
SW ROSEWALK
SW MELROSE
SW ROSEWALK
SW ELLIOTT
SW ROSEWALK
SW ROSEWALK
SW ROSEWALK

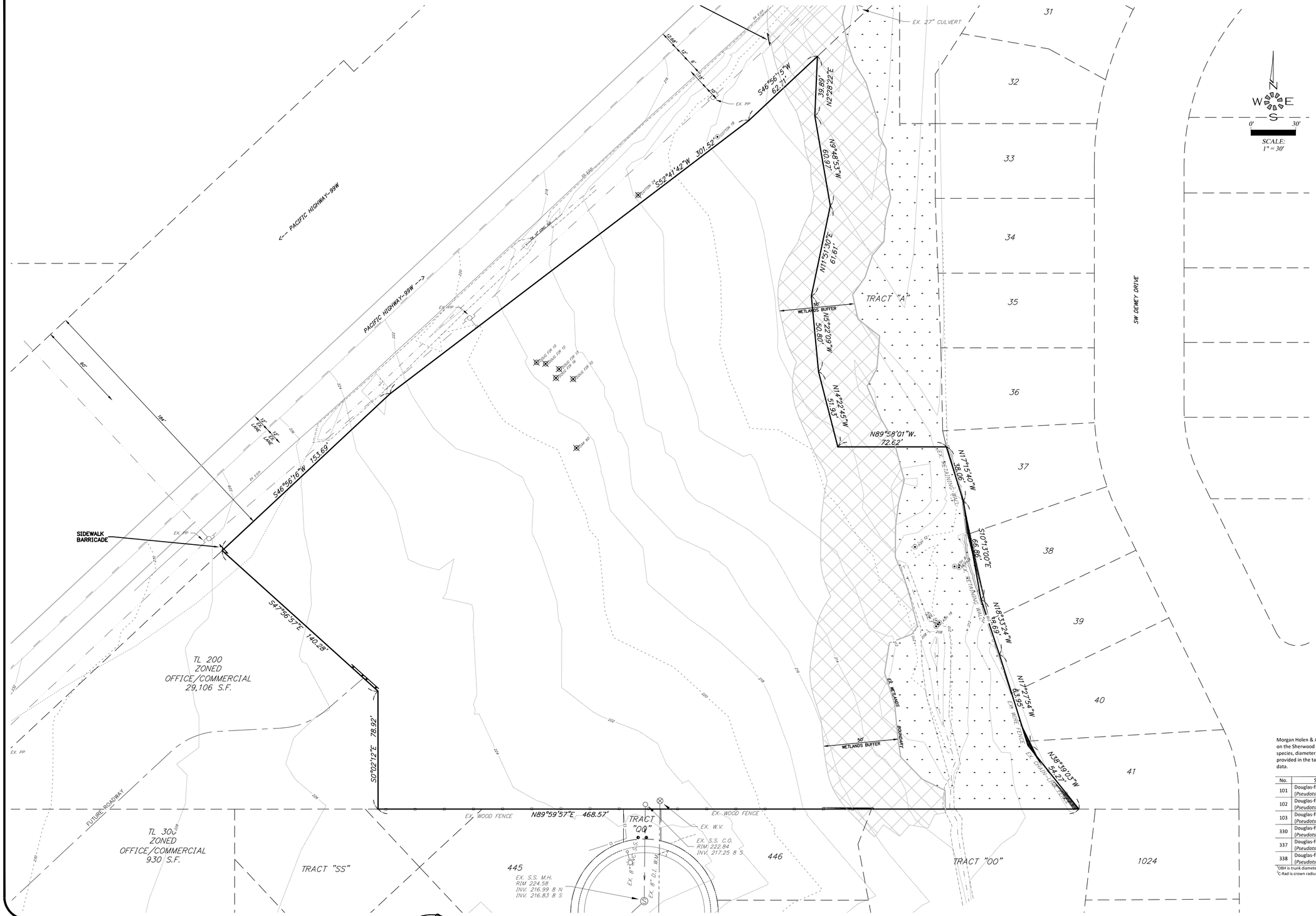

100% XXX TOTAL TREES WITHIN BOUNDARY.
25% XX MINIMUM TREES TO REMAIN.

⊠ = EXISTING TREE WHICH MAY BE REMOVED.

⊙ = EXISTING TREE TO REMAIN.

= PROPOSED TREE.

Morgan Holen & Associates, LLC was contracted by Del Boca Vista to evaluate six existing trees located on the Sherwood subdivision project site (tax lot no. 2S131B000201) and collect inventory data including species, diameter, crown radius, and general condition. A complete description of the individual trees is provided in the table below. Trees are tagged on the ground with point numbers corresponding with this data.

No.	Species	DBH[1]	C-Rad[2]	Condition	Comments
101	Douglas-fir (*Pseudotsuga menziesii*)	8"	8'	good	young tree, no major defects
102	Douglas-fir (*Pseudotsuga menziesii*)	10"	12'	good	young tree, no major defects
103	Douglas-fir (*Pseudotsuga menziesii*)	10"	12'	good	young tree, no major defects
330	Douglas-fir (*Pseudotsuga menziesii*)	54"	28'	good	mature tree, codominant leaders with some included bark
337	Douglas-fir (*Pseudotsuga menziesii*)	16"	12'	good	semi-mature tree, no major defects
338	Douglas-fir (*Pseudotsuga menziesii*)	17"	12'	good	semi-mature tree, no major defects

[1] DBH is trunk diameter at breast height measured at 4.5-feet above ground level.
[2] C-Rad is crown radius measured in feet from the center of the tree to the edge of the dripline.

MULTI/TECH
ENGINEERING SERVICES, INC.
1155 13th ST. S.E. SALEM, OR. 97302
PH. (503) 363-9227 FAX (503) 364-1260
www.mtengineering.net office@mtengineering.net

MULTI/TECH ENGINEERING EXEMPT FROM LIABILITY IF NOT STAMPED APPROVED

NOT FOR CONSTRUCTION UNLESS STAMPED APPROVED HERE

REGISTERED PROFESSIONAL ENGINEER OREGON JULY 11, 1978 MARK D. GRENZ

EXPIRES: 06-30-2017

NO CHANGES, MODIFICATIONS OR REPRODUCTIONS TO BE MADE TO THESE DRAWINGS WITHOUT WRITTEN AUTHORIZATION FROM THE DESIGN ENGINEER.

DIMENSIONS & NOTES TAKE PRECEDENCE OVER GRAPHICAL REPRESENTATION.

6165p/PLOT:1 SDR2-EX

Design: M.D.G.
Drawn: C.D.S.
Checked: Z.Z.Z.
Date: APRIL 2016
Scale: AS SHOWN
As-Built:

DEL BOCA VISTA SUBDIVISION

EXISTING CONDITIONS PLAN

Project Number
6165
Sheet Number
SDR-2

J:\6100-6199\6165-PacificNwSubdivision\Dwg\6165p.dwg, 8/30/2016 8:17:52 AM, CSchreiner

A variance requires demonstration of hardship or practical difficulty due to unusual site or area conditions of the property. Variances must meet Sherwood Development Code and TPR criteria.

Arterial Street Design Characteristics

Characteristic	Arterials
Vehicle Lane Widths (Turn Lane - 12-14 ft.)	12 ft.
On-Street Parking	Only in (i.e. downtown) (8 ft.)
Bicycle Lanes (minimum)	6 ft.
Sidewalks (minimum)	6-8 ft. *1
Landscape Strips	Required
Raised Medians	Required
Neighborhood Traffic Management (NTM)	Prohibited
Transit	Appropriate
Turn Lanes	When Warranted *2
Access Control	See Later Discussion

Notes:
1. 8 feet for residential streets, 6 feet in commercial/industrial areas.
2. Turn lane warrants should be reviewed using Highway Research Record No. 211, NCHRP Report No. 279 or other updated/supersiding reference.

Figure 16A
ARTERIAL STREETS
SHERWOOD
STREET CROSS SECTIONS

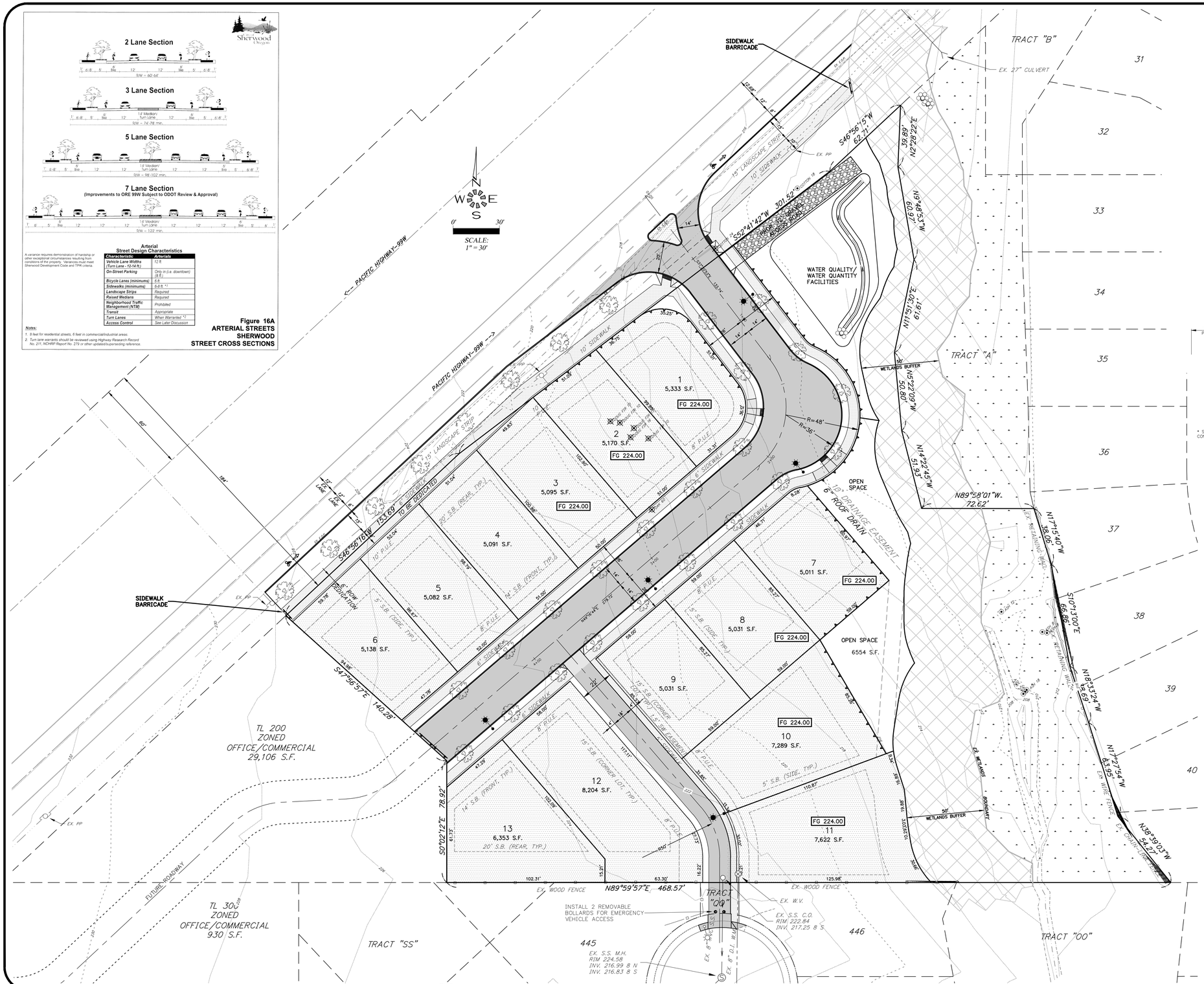

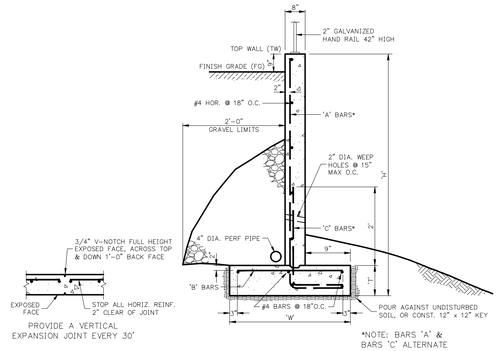

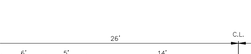

EXPANSION JOINT
-NTS-

RETAINING WALL
-NTS-

"H"	"W"	"T"	BARS "A"	BARS "B"	BARS "C"
3'-0"	2'-0"	10"	#4 @ 12" O.C.	#4 @ 12" O.C.	--
4'-0"	2'-6"	10"	#4 @ 12" O.C.	#4 @ 12" O.C.	--
6'-0"	3'-4"	12"	#4 @ 12" O.C.	#4 @ 6" O.C.	#4 @ 12" O.C.
8'-0"	4'-3"	12"	#4 @ 12" O.C.	#4 @ 6" O.C.	#4 @ 12" O.C.
10'-0"	5'-8"	12"	#4 @ 8" O.C.	#4 @ 4" O.C.	#4 @ 8" O.C.

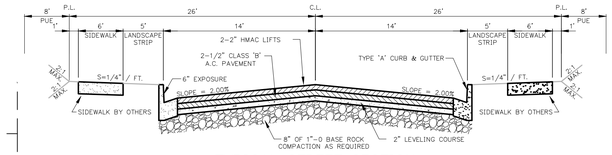

* SEE DWG.318 FOR ADDITIONAL CONSTRUCTION INFORMATION.

TYPICAL STREET SECTION
-NTS-

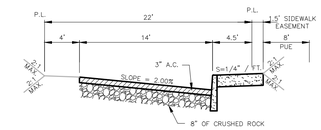

TYPICAL ALLEY SECTION
-NTS-

PARCEL SIZE:
GROSS AREA_____ 152,510 SQ.FT. (3.50 AC.)
DEVELOPABLE AREA ____ 91,149 SQ.FT. (2.09 AC.)
NUMBER OF UNITS _____ 13
DENSITY _____ 6.22 UNITS/ACRE
LARGEST _____ 8,201 LOTSQ. FT.
SMALLEST _____ 5,011 LOTSQ. FT.
AVERAGE _____ 5,848 SQ. FT.
OPEN SPACE_____ 6,554 LOTSQ. FT. (7.19 %)
WETLAND BUFFER_____ 17,466 SQ.FT.

EXISTING ZONE _____
COMPREHENSIVE DESG. _

UTILITIES:
CABLE _____ COMCAST CABLE SERVICES
POWER _____ P.G.E.
PHONE _____ CENTURY LINK
GAS _____ N.W. NATURAL
STORM DRAIN, ___ CITY OF SHERWOOD
SANITARY SEWER,
WATER.

OPEN SPACE
DEVELOPABLE AREA
WETLAND BUFFER
WETLAND AREA
PAVED AREA
RETAINING WALL
WESTBROOK STREET LIGHTS (SEE DETAIL RD-57)
STREET TREES - 2" CALIPER, 6' HEIGHT AT 40' SPACING (SEE CITY OF SHERWOOD APPROVED STREET TREE LIST)

MULTI/TECH
ENGINEERING SERVICES, INC.
1155 13th ST. S.E. SALEM, OR. 97302
PH. (503) 363-9227 FAX (503) 364-1260
www.mtengineering.net office@mtengineering.net

MULTI/TECH ENGINEERING EXEMPT FROM LIABILITY IF NOT STAMPED APPROVED
NOT FOR CONSTRUCTION UNLESS STAMPED APPROVED HERE

REGISTERED PROFESSIONAL ENGINEER
OREGON
JULY 14, 1978
MARK D. GRENZ
EXPIRES: 06-30-2017

NO CHANGES, MODIFICATIONS OR REPRODUCTIONS TO BE MADE TO THESE DRAWINGS WITHOUT WRITTEN AUTHORIZATION FROM THE DESIGN ENGINEER.

DIMENSIONS & NOTES TAKE PRECEDENCE OVER GRAPHICAL REPRESENTATION.

6165p/PLOT:1 SDR3-SITE

Design: M.D.G.
Drawn: C.D.S.
Checked: Z.Z.Z.
Date: APRIL 2016
Scale: AS SHOWN
As-Built: _____

DEL BOCA VISTA SUBDIVISION

PRELIMINARY SITE PLAN

Project Number
6165
Sheet Number
SDR-3

J:\6100-6199\6165-PacificNewSubdivision\Dwg\6165p.dwg, 8/30/2016 8:17:43 AM, CSchreiner

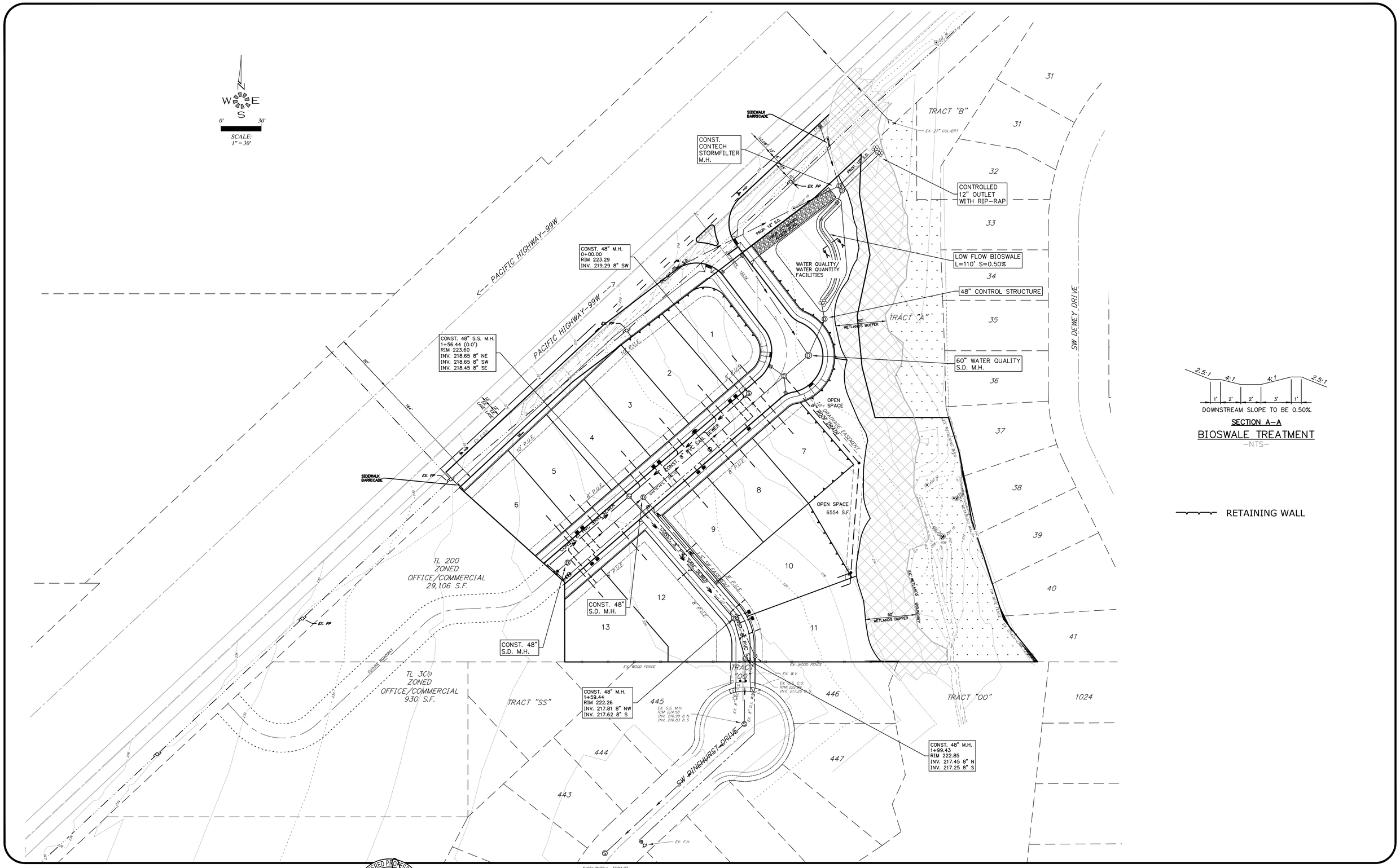

MULTI/TECH
ENGINEERING SERVICES, INC.
1155 13th ST. S.E. SALEM, OR. 97302
PH. (503) 363-9227 FAX (503) 364-1260
www.mtengineering.net office@mtengineering.net

MULTI/TECH ENGINEERING EXEMPT FROM LIABILITY IF NOT STAMPED APPROVED
NOT FOR CONSTRUCTION UNLESS STAMPED APPROVED HERE

REGISTERED PROFESSIONAL ENGINEER
OREGON
JULY 17, 1978
MARK D. GRENZ
EXPIRES: 06-30-2017

NO CHANGES, MODIFICATIONS OR REPRODUCTIONS TO BE MADE TO THESE DRAWINGS WITHOUT WRITTEN AUTHORIZATION FROM THE DESIGN ENGINEER.

DIMENSIONS & NOTES TAKE PRECEDENCE OVER GRAPHICAL REPRESENTATION.

6165p/PLOT: 1 SDR4-UT

Design: M.D.G.
Drawn: C.D.S.
Checked: Z.Z.Z.
Date: APRIL 2016
Scale: AS SHOWN
As-Built: _____

DEL BOCA VISTA SUBDIVISION

PRELIMINARY UTILITY PLAN

Project Number
6165
Sheet Number
SDR-4

J:\V100-6199\V6165-PacificHwySubdivision\Dwg\V6165p.dwg, 8/30/2016 8:17:53 AM, CSchreiner

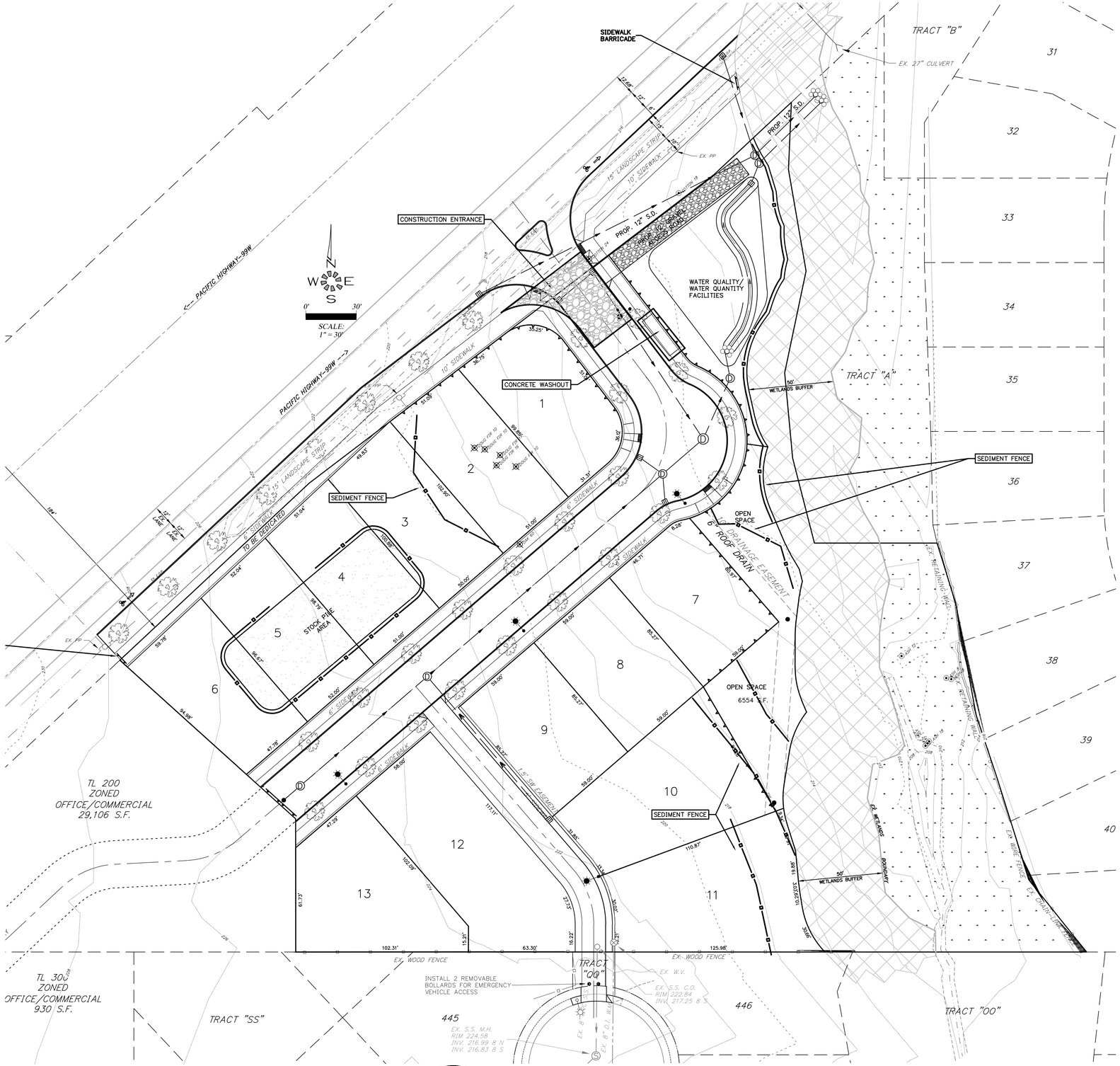

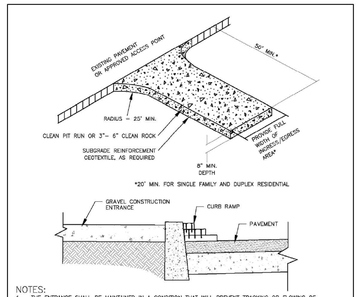

NOTES:

1. THE ENTRANCE SHALL BE MAINTAINED IN A CONDITION THAT WILL PREVENT TRACKING OR FLOWING OF SEDIMENT ONTO PUBLIC RIGHT-OF-WAYS. THIS MAY REQUIRE TOP DRESSING, REPAIR AND/OR CLEAN OUT OF ANY MEASURES USED TO TRAP SEDIMENT.
2. ALL SEDIMENT SPILLED, DROPPED, WASHED OR TRACKED ONTO PUBLIC RIGHT-OF-WAY, MUST BE REMOVED IMMEDIATELY.
3. WHEN WASHING IS REQUIRED, IT SHALL BE DONE ON AN AREA STABILIZED WITH CRUSHED STONE THAT DRAINS INTO AN APPROVED SEDIMENT TRAP OR SEDIMENT BASIN.
4. WHERE RUNOFF CONTAINING SEDIMENT LADEN WATER IS LEAVING THE SITE VIA THE CONSTRUCTION ENTRANCE, OTHER MEASURES SHALL BE IMPLEMENTED TO DIVERT RUNOFF THROUGH AN APPROVED FILTERING SYSTEM.
5. DIMENSIONS:
   RESIDENTIAL FAMILY
   20' LONG BY 20' WIDE 8" DEEP OF ¾" MINUS CLEAN ROCK.
   COMMERCIAL
   50' LONG BY 20' WIDE 3-6" CLEAN ROCK, GOVERNING AUTHORITY MAY REQUIRE GEOTEXTILE FABRIC TO PREVENT SUB-SOIL PUMPING.

FOR FURTHER INFORMATION ON DESIGN CRITERIA SEE CHAPTER 4 OF CLEAN WATER SERVICES EROSION PREVENTION AND SEDIMENT CONTROL PLANNING AND DESIGN MANUAL.

STANDARD DRAWING TITLE	DRAWING NUMBER
CONSTRUCTION ENTRANCE	ESC-12
SCALE	DATE
N.T.S.	JUL '09

Any alteration of this drawing may cap be amendment in any way with the City of Sherwood Standard Drawings.

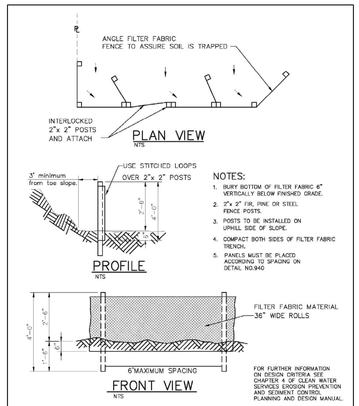

NOTES:

1. BURY BOTTOM OF FILTER FABRIC 6" VERTICALLY BELOW FINISHED GRADE.
2. 2"x 2" FIR, PINE OR STEEL FENCE POSTS.
3. POSTS TO BE INSTALLED ON UPHILL SIDE OF SLOPE.
4. COMPACT BOTH SIDES OF FILTER FABRIC TRENCH.
5. PANELS MUST BE PLACED ACCORDING TO SPACING ON DETAIL NO.940

FOR FURTHER INFORMATION ON DESIGN CRITERIA SEE CHAPTER 4 OF CLEAN WATER SERVICES EROSION PREVENTION AND SEDIMENT CONTROL PLANNING AND DESIGN MANUAL.

STANDARD DRAWING TITLE	DRAWING NUMBER
SEDIMENT FENCE	ESC-16
SCALE	DATE
N.T.S.	JUL '09

Any alteration of this drawing may cap be amendment in any way with the City of Sherwood Standard Drawings.

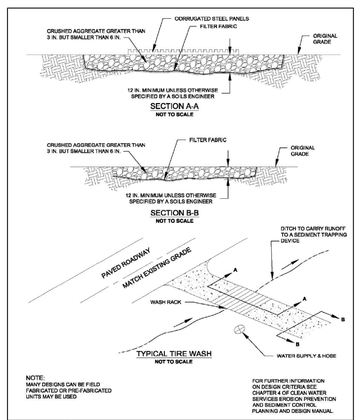

NOTE:
MANY DESIGNS CAN BE FIELD FABRICATED OR PRE-FABRICATED UNITS MAY BE USED

FOR FURTHER INFORMATION ON DESIGN CRITERIA SEE CHAPTER 4 OF CLEAN WATER SERVICES EROSION PREVENTION AND SEDIMENT CONTROL PLANNING AND DESIGN MANUAL

STANDARD DRAWING TITLE	DRAWING NUMBER
TIRE WASH- MANUAL HOSE WASH	ESC-14
SCALE	DATE
N.T.S.	JUL '09

Any alteration of this drawing may cap be amendment in any way with the City of Sherwood Standard Drawings.

MULTI/TECH ENGINEERING SERVICES, INC.
1155 13th ST. S.E. SALEM, OR. 97302
PH. (503) 363-9227 FAX (503) 364-1260
www.mtengineering.net office@mtengineering.net

MULTI/TECH ENGINEERING EXEMPT FROM LIABILITY IF NOT STAMPED APPROVED

NOT FOR CONSTRUCTION UNLESS STAMPED APPROVED HERE

REGISTERED PROFESSIONAL ENGINEER — OREGON — JULY 14, 1978 — MARK D. GRENZ

EXPIRES: 06-30-2017

NO CHANGES, MODIFICATIONS OR REPRODUCTIONS TO BE MADE TO THESE DRAWINGS WITHOUT WRITTEN AUTHORIZATION FROM THE DESIGN ENGINEER.

DIMENSIONS & NOTES TAKE PRECEDENCE OVER GRAPHICAL REPRESENTATION.

6165p/PLOT:1 SDR5-EC

Design: M.D.G.
Drawn: C.D.S.
Checked: Z.Z.Z.
Date: APRIL 2016
Scale: AS SHOWN
As-Built: _____

DEL BOCA VISTA SUBDIVISION

PRELIMINARY EROSION CONTROL

Project Number **6165**
Sheet Number **SDR-5**

J:\6100-6199\6165-PacificNwSubdivision\Dwg\6165p.dwg, 8/30/2016 8:18:02 AM, CSchreiner