MANDEL FARMS

SUBDIVISION APPLICATION

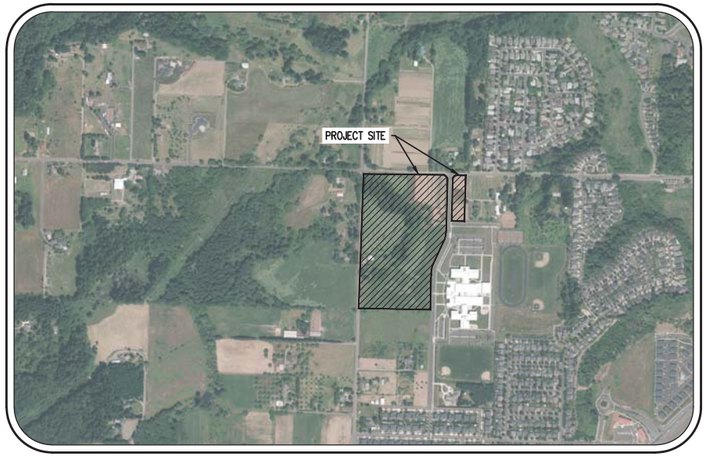

VICINITY MAP
NOT TO SCALE

LEGEND

	EXISTING	PROPOSED		EXISTING	PROPOSED
DECIDUOUS TREE			STORM SEWER CLEAN OUT		
CONIFEROUS TREE			STORM SEWER CATCH BASIN		
			STORM SEWER AREA DRAIN		
FIRE HYDRANT			STORM SEWER MANHOLE		
WATER BLOWOFF			GAS METER		
WATER METER			GAS VALVE		
WATER VALVE			GUY WIRE ANCHOR		
DOUBLE CHECK VALVE			POWER POLE		
AIR RELEASE VALVE			POWER VAULT	P	P
SANITARY SEWER CLEAN OUT			POWER JUNCTION BOX		
SANITARY SEWER MANHOLE			POWER PEDESTAL		
SIGN			COMMUNICATIONS VAULT	C	C
STREET LIGHT			COMMUNICATIONS JUNCTION BOX		
MAILBOX	MB	MB	COMMUNICATIONS RISER		

	EXISTING	PROPOSED
RIGHT-OF-WAY LINE		
BOUNDARY LINE		
PROPERTY LINE		
CENTERLINE		
DITCH		
CURB		
EDGE OF PAVEMENT		
EASEMENT		
FENCE LINE		
GRAVEL EDGE		
POWER LINE	PWR	PWR
OVERHEAD WIRE	OHW	OHW
COMMUNICATIONS LINE	COM	COM
FIBER OPTIC LINE	CFO	CFO
GAS LINE	GAS	GAS
STORM SEWER LINE	STM	STM
SANITARY SEWER LINE	SAN	SAN
WATER LINE	WAT	WAT

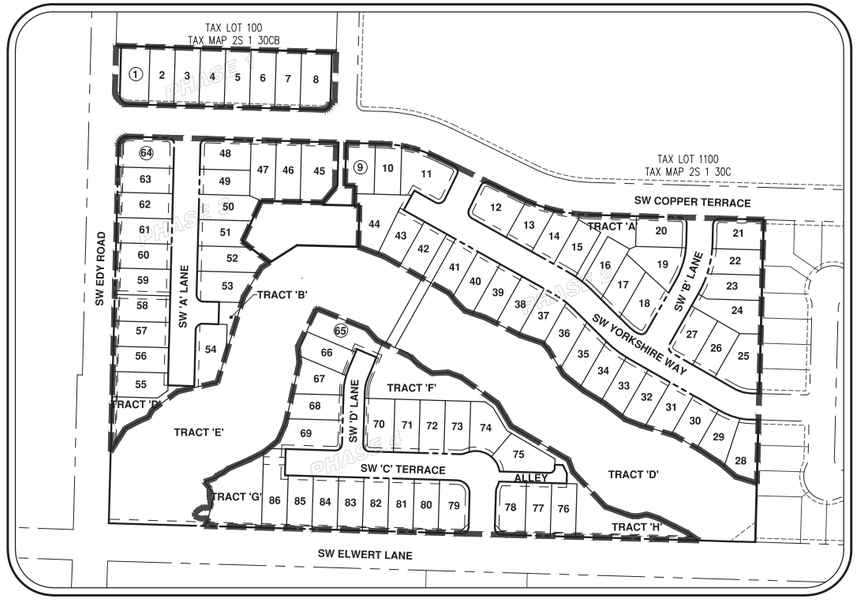

SITE MAP
1"=150'

SHEET INDEX

P01 – COVER SHEET WITH VICINITY AND SITE MAPS
P02 – EXISTING CONDTIONS PLAN
P03 – EXISTING CITY ZONE MAP
P04 – PRELIMINARY SUBDIVISION PLAT
P05 – PRELIMINARY BUILDING SETBACKS PLAN
P06 – PRELIMINARY TREE PRESERVATION AND REMOVAL PLAN
P07 – PRELIMINARY TREE NOTES
P08 – PRELIMINARY DETAILED TREE INVENTORY TABLE
P09 – PRELIMINARY DEMOLITION PLAN
P10 – PRELIMINARY GRADING AND EROSION AND SEDIMENT CONTROL PLAN
P11 – PRELIMINARY STREET PLAN
P12 – PRELIMINARY STREET PROFILES AND CROSS-SECTIONS
P13 – PRELIMINARY STREET PROFILES AND CROSS-SECTIONS (CONT.)
P14 – PRELIMINARY STREET PROFILES AND CROSS-SECTIONS (CONT.)
P15 – PRELIMINARY STREET PROFILES AND CROSS-SECTIONS (CONT.)
P16 – PRELIMINARY STREET PROFILES AND CROSS-SECTIONS (CONT.)
P17 – PRELIMINARY PHOTOMETRIC PLAN
P18 – PRELIMINARY PHOTOMETRIC CALCULATION SUMMARY
P19 – PRELIMINARY COMPOSITE UTILITY PLAN
P20 – CONCEPTUAL FUTURE CONNECTIVITY PLAN
P21 – PRELIMINARY STREET TREE & OPEN SPACE PLAN
P22 – PRELIMINARY TREE CANOPY PLAN
P23 – CONCEPTUAL OPEN SPACE PLAN

APPLICANT/PLANNING
VENTURE PROPERTIES, INC.
CONTACT: KELLY RITZ
4230 GALEWOOD STREET, SUITE 100
LAKE OSWEGO, OR 97035

PLANNING/ENGINEERING/SURVEYING/ NATURAL RESOURCE/ARBORIST/ LANDSCAPE ARCHITECTURE FIRM
AKS ENGINEERING & FORESTRY, LLC
CONTACT: MIMI DOUKAS, AICP, RLA
12965 SW HERMAN ROAD, SUITE 100
TUALATIN, OR 97062
PH: 503-563-6151
FAX: 503-563-6152

PROJECT LOCATION: WEST AND NORTH OF LAUREL RIDGE MIDDLE SCHOOL, SOUTHEAST CORNER OF INTERSECTION BETWEEN SW ELWERT AND EDY ROADS IN SHERWOOD, OREGON 97140

PROPERTY DESCRIPTION: TAX LOTS 250 AND 251, TAX MAP 2S130CB LOCATED IN THE SOUTHWEST 1/4 OF SECTION 30, TOWNSHIP 1 NORTH, RANGE 4 WEST, WILLAMETTE MERIDIAN, CITY OF SHERWOOD, WASHINGTON COUNTY, OREGON

EXISTING LAND USE: FARM AND RESIDENTIAL PROPERTY WITH GRAVEL DRIVEWAY, HOUSE, ASSOCIATED BUILDINGS AND LANDSCAPE AREA

PROJECT PURPOSE: SINGLE-FAMILY DETACHED RESIDENTIAL 86 LOT SUBDIVISION

DATUM: ELEVATIONS ARE BASED ON WASHINGTON COUNTY BENCHMARK NO. 101, A 2-1/2" BRASS DISK AT THE SOUTHEAST CORNER OF THE INTERSECTION OF SW EDY ROAD AND SW ELWERT ROAD WITH A NGVD 29 ELEVATION OF 158.238 FEET.

AKS ENGINEERING & FORESTRY, LLC
12965 SW HERMAN RD STE 100
TUALATIN, OR 97062
P: 503.563.6151
F: 503.563.6152
aks-eng.com

AKS
ENGINEERING - SURVEYING - NATURAL RESOURCES
FORESTRY - PLANNING - LANDSCAPE ARCHITECTURE

MANDEL FARMS SUBDIVISION
SHERWOOD OREGON
TAX LOTS 250 AND 251 WASHINGTON COUNTY TAX MAP 2S 1 30CB

COVER SHEET WITH VICINITY AND SITE MAPS

DESIGNED BY:	PAS/DS
DRAWN BY:	DS
CHECKED BY:	PAS
SCALE:	AS NOTED
DATE: 01-08-2016	

REGISTERED PROFESSIONAL ENGINEER
OREGON
JULY 13, 2001
PHILIP A. SELLKE
PRELIMINARY NOT FOR CONSTRUCTION
RENEWAL DATE: 6/30/16

REVISIONS

JOB NUMBER
4570

SHEET
P01

AKS DRAWING FILE: P01 TITLE.DWG | LAYOUT: P01

NOTES:

1. UTILITIES SHOWN ARE BASED ON UNDERGROUND UTILITY LOCATE MARKINGS AS PROVIDED BY OTHERS, PROVIDED PER UTILITY LOCATE TICKET NUMBERS 15179344, 15179349, AND 15179352. THE SURVEYOR MAKES NO GUARANTEE THAT THE UNDERGROUND LOCATES REPRESENT THE ONLY UTILITIES IN THE AREA. CONTRACTORS ARE RESPONSIBLE FOR VERIFYING ALL EXISTING CONDITIONS PRIOR TO BEGINNING CONSTRUCTION.
2. FIELD WORK WAS CONDUCTED JULY 30 – AUGUST 20, 2015.
3. VERTICAL DATUM: ELEVATIONS ARE BASED ON WASHINGTON COUNTY BENCHMARK NO. 101, A 2-1/2" BRASS DISK AT THE SOUTHEAST CORNER OF THE INTERSECTION OF SW EDY ROAD AND SW ELWERT ROAD. WITH A NGVD 29 ELEVATION OF 158.238 FEET.
4. THIS MAP DOES NOT CONSTITUTE A PROPERTY BOUNDARY SURVEY.
5. SURVEY IS ONLY VALID WITH SURVEYOR'S STAMP AND SIGNATURE.
6. BUILDING FOOTPRINTS ARE MEASURED TO SIDING UNLESS NOTED OTHERWISE. CONTACT SURVEYOR WITH QUESTIONS REGARDING BUILDING TIES.
7. CONTOUR INTERVAL IS 1 FOOT.
8. TREES WITH DIAMETER OF 6" AND GREATER ARE SHOWN. TREE DIAMETERS WERE MEASURED UTILIZING A DIAMETER TAPE AT BREAST HEIGHT. TREE INFORMATION IS SUBJECT TO CHANGE UPON ARBORIST INSPECTION.
9. WETLAND BOUNDARIES SHOWN WERE DELINEATED BY AKS ENGINEERING & FORESTRY, LLC. IN JULY OF 2015 AND WERE PROFESSIONALLY SURVEYED BY AKS IN AUGUST OF 2015.

CURVE TABLE				
CURVE	RADIUS	DELTA	LENGTH	CHORD
C2	279.00'	24°22'40"	118.71'	S13°49'14"W 117.81'
C3	321.00'	24°22'09"	136.53'	S13°49'30"W 135.50'
C4	15.00'	90°04'55"	23.58'	N43°24'33"W 21.23'
C5	47.50'	32°47'59"	27.19'	N46°04'18"E 26.82'

SCALE 1" = 60 FEET

60 0 24 36 48 60

AKS ENGINEERING & FORESTRY, LLC
12965 SW HERMAN RD STE 100
TUALATIN, OR 97062
P: 503.563.6151
F: 503.563.6152
aks-eng.com

ENGINEERING - SURVEYING - NATURAL RESOURCES
FORESTRY - PLANNING - LANDSCAPE ARCHITECTURE

MANDEL FARMS SUBDIVISION

OREGON
WASHINGTON COUNTY TAX MAP 2S 1 30CB

SHERWOOD
TAX LOTS 250 AND 251

EXISTING CONDITIONS PLAN

DESIGNED BY:
DRAWN BY: MSK
CHECKED BY: SRB/NSW
SCALE: AS NOTED
DATE: 01-08-2016

REGISTERED PROFESSIONAL LAND SURVEYOR
PRELIMINARY NOT FOR CONSTRUCTION
OREGON JULY 09, 2003 ALEXANDER H. HURLEY 85539LS
RENEWS: 6/30/17

REVISIONS

JOB NUMBER
4570

SHEET
P02

AKS DRAWING FILE: P02 EX CONDWG | LAYOUT: P02

CITY ZONE LIMITS DEPICTED ON THIS EXHIBIT ARE BASED OF SCALED DIMENSIONS AND ZONING LAYOUT PROVIDED ON THE SHERWOOD PLAN AND ZONE MAP OBTAINED FROM THE CITY OF SHERWOOD WEBSITE.

LEGEND

- MEDIUM DENSITY RESIDENTIAL LOW – MDRH (±546,194 SF)
- MEDIUM DENSITY RESIDENTIAL HIGH – MDRL (±253,680 SF)
- OPEN SPACE – OS (±173,786 SF)

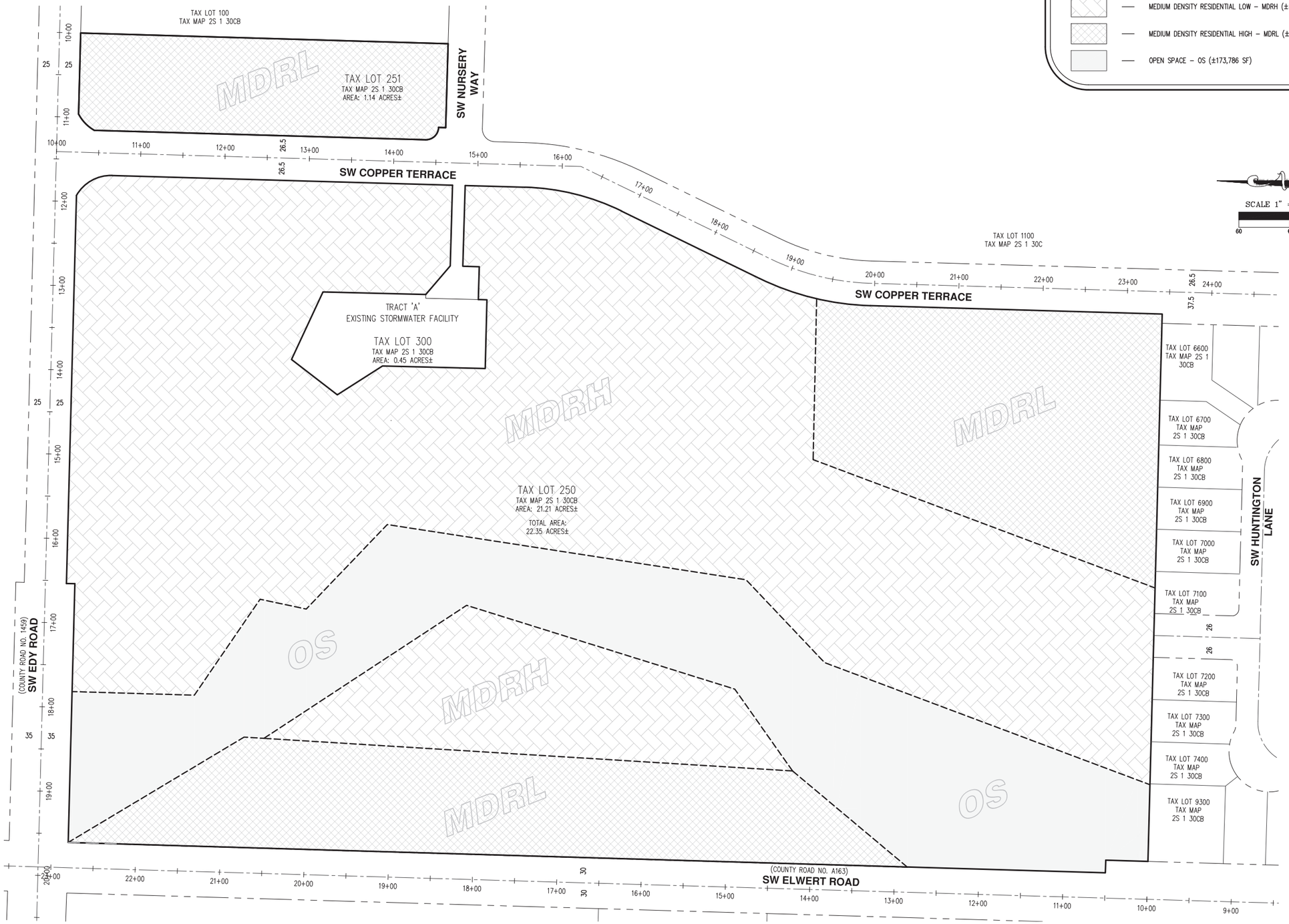

SCALE 1" = 60 FEET

60 0 24 38 48 60

AKS ENGINEERING & FORESTRY, LLC
12965 SW HERMAN RD STE 100
TUALATIN, OR 97062
P: 503.563.6151
F: 503.563.6152
aks-eng.com

ENGINEERING · SURVEYING · NATURAL RESOURCES
FORESTRY · PLANNING · LANDSCAPE ARCHITECTURE

MANDEL FARMS SUBDIVISION

SHERWOOD OREGON

TAX LOTS 250 AND 251 WASHINGTON COUNTY TAX MAP 2S 1 30CB

EXISTING CITY ZONE MAP

DESIGNED BY: PAS/DS
DRAWN BY: DS
CHECKED BY: PAS
SCALE: AS NOTED
DATE: 01-08-2016

REGISTERED PROFESSIONAL LAND SURVEYOR
OREGON
JULY 09, 2003
ALEXANDER H. HURLEY
58539LS
RENEWS: 6/30/17

PRELIMINARY NOT FOR CONSTRUCTION

REVISIONS

JOB NUMBER
4570

SHEET
P03

AKS DRAWING FILE: P03 EX ZONING.DWG | LAYOUT: P03

SW COPPER TERRACE						
CURVE/TANGENT	STATION	RADIUS	LENGTH	DELTA	CHORD	TANGENT/CHORD BEARING
T1	10+00.00		622.21'			S01°37'54"W
T2	16+22.21		248.16'			S26°00'34"W
C1	18+70.37	294.50'	125.26'	24°22'09"	124.32	S13°49'30"W
T3	19+95.63		604.37'			S01°38'25"W

SW EDY ROAD						
CURVE/TANGENT	STATION	RADIUS	LENGTH	DELTA	CHORD	TANGENT/CHORD BEARING
T4	10+00.00		1428.46'			N88°31'20"W

SW ELWERT ROAD						
CURVE/TANGENT	STATION	RADIUS	LENGTH	DELTA	CHORD	TANGENT/CHORD BEARING
T5	10+00.00		1591.58'			N01°40'34"E

SW YORKSHIRE WAY						
CURVE/TANGENT	STATION	RADIUS	LENGTH	DELTA	CHORD	TANGENT/CHORD BEARING
T6	8+74.08		125.92'			N01°43'10"E
C2	10+15.59	100.00'	48.89'	28°00'35"	48.40	N15°43'28"E
T7	10+64.47		210.38'			N29°43'46"E
C3	12+74.86	185.00'	48.46'	15°00'32"	48.32	N37°14'02"E
T8	13+23.32		95.12'			N44°44'18"E
C4	14+18.44	185.00'	50.01'	15°29'18"	49.86	N36°59'39"E

SW 'B' LANE						
CURVE/TANGENT	STATION	RADIUS	LENGTH	DELTA	CHORD	TANGENT/CHORD BEARING
T11	2+73.02		176.98'			N60°16'14"W
C6	1+82.32	185.00'	90.70'	28°05'20"	89.79	N74°18'54"W
T12	0+75.00		107.32'			N88°21'35"W

SW 'A' LANE						
CURVE/TANGENT	STATION	RADIUS	LENGTH	DELTA	CHORD	TANGENT/CHORD BEARING
T13	0+75.00		550.00'			N88°31'20"W

SW 'C' TERRACE						
CURVE/TANGENT	STATION	RADIUS	LENGTH	DELTA	CHORD	TANGENT/CHORD BEARING
T14	0+75.00		150.00'			S88°19'26"E
C7	2+25.00	51.00'	80.11'	90°00'00"	72.12	N46°40'34"E
T15	3+05.11		369.89'			N01°40'34"E

SW 'D' LANE						
CURVE/TANGENT	STATION	RADIUS	LENGTH	DELTA	CHORD	TANGENT/CHORD BEARING
T16	0+75.00		168.26'			S88°19'26"E
C8	2+43.26	100.00'	36.72'	21°02'25"	36.52	S77°48'14"E
T17	2+79.98		70.02'			S67°17'01"E

CURVE TABLE				
CURVE	RADIUS	DELTA	LENGTH	CHORD
C9	18.00'	89°50'45"	28.23'	N46°33'17"E 25.42'
C10	15.00'	89°57'02"	23.55'	S43°20'36"E 21.20'
C11	18.00'	90°09'15"	28.32'	N43°26'43"W 25.49'
C12	13.00'	89°50'45"	20.39'	N46°33'17"E 18.36'
C13	13.00'	90°00'00"	20.42'	S43°31'20"E 18.38'
C14	13.00'	90°00'00"	20.42'	N46°28'40"E 18.38'
C15	13.00'	90°09'15"	20.46'	N43°26'43"W 18.41'
C16	268.00'	8°25'18"	39.39'	S5°50'33"W 39.36'
C17	268.00'	15°57'22"	74.63'	S18°01'53"W 74.39'
C18	13.00'	90°00'00"	20.42'	S71°00'34"W 18.38'
C19	13.00'	93°14'26"	21.16'	N17°22'13"W 18.90'
C20	159.00'	9°50'28"	27.31'	N34°10'14"E 27.28'
C21	159.00'	5°38'50"	15.67'	N41°54'53"E 15.67'
C22	211.00'	13°33'05"	49.91'	S37°57'45"W 49.79'
C23	211.00'	1°27'27"	5.37'	S30°27'29"W 5.37'
C24	126.00'	18°23'54"	40.46'	S20°31'49"W 40.29'
C25	126.00'	9°36'42"	21.14'	S6°31'31"W 21.11'
C26	13.00'	90°00'00"	20.42'	S18°59'26"E 18.38'
C27	13.00'	86°45'34"	19.69'	N72°37'47"E 17.86'
C28	211.00'	4°46'37"	17.59'	N31°38'18"E 17.59'
C29	211.00'	4°22'25"	16.11'	N36°12'50"E 16.10'
C30	211.00'	6°20'16"	23.34'	N41°34'10"E 23.33'
C31	158.00'	11°35'33"	31.97'	N38°58'24"E 31.91'
C32	13.00'	93°29'23"	21.21'	N13°31'34"W 18.94'
C33	159.00'	24°35'55"	68.26'	N72°34'12"W 67.74'
C34	159.00'	3°29'26"	9.69'	N86°36'52"W 9.68'
C35	13.00'	90°00'00"	20.42'	S46°38'25"W 18.38'
C36	332.00'	3°24'27"	19.74'	S3°20'39"W 19.74'
C37	332.00'	8°21'53"	48.47'	S9°13'49"W 48.43'
C38	332.00'	10°12'05"	59.11'	S18°30'47"W 59.03'
C39	332.00'	2°23'44"	13.88'	S24°48'42"W 13.88'
C40	13.00'	90°00'00"	20.42'	S43°21'35"E 18.38'
C41	211.00'	2°37'46"	9.68'	S87°02'42"E 9.68'
C42	211.00'	13°48'02"	50.82'	S78°49'47"E 50.70'
C43	211.00'	11°39'32"	42.94'	S66°06'00"E 42.86'
C44	13.00'	90°00'00"	20.42'	N74°43'46"E 18.38'
C45	74.00'	28°00'35"	36.18'	N15°43'28"E 35.82'
C46	13.00'	90°00'00"	20.42'	S43°19'26"E 18.38'
C47	25.00'	90°00'00"	39.27'	S46°40'34"W 35.36'
C48	13.00'	90°00'00"	20.42'	N43°19'26"W 18.38'
C49	121.00'	15°10'29"	32.05'	N80°44'11"W 31.95'
C50	121.00'	5°51'56"	12.39'	N70°12'59"W 12.38'
C51	79.00'	21°02'25"	29.01'	N77°48'14"W 28.85'
C52	13.00'	90°00'00"	20.42'	N46°40'35"E 18.38'
C53	28.00'	24°53'47"	12.17'	N10°46'18"W 12.07'
C54	48.00'	7°33'06"	6.33'	N19°26'39"W 6.32'
C55	48.00'	56°00'38"	46.92'	N12°20'13"E 45.08'
C56	48.00'	56°00'38"	46.92'	N12°20'13"E 45.08'
C57	48.00'	40°36'10"	34.02'	N60°38'37"E 33.31'
C58	10.00'	89°59'58"	15.71'	S43°19'27"E 14.14'
C59	48.00'	10°11'48"	8.54'	N69°54'04"W 8.53'
C60	28.00'	28°12'31"	13.79'	N75°25'46"W 13.65'
C61	13.00'	90°00'00"	20.42'	N46°40'34"E 18.38'

NOTES:

1. TRACTS A, B, D, F, H, AND I SHALL BE CONVEYED TO MANDEL FARMS HOMEOWNER'S ASSOCIATION.
2. TRACTS C, E, AND G SHALL BE CONVEYED TO THE CITY OF SHERWOOD.
3. TRACTS C, E, F, G AND I SHALL HAVE A STORM SEWER, SURFACE WATER, DRAINAGE AND DETENTION EASEMENT TO CWS OVER ITS ENTIRETY.

AKS ENGINEERING & FORESTRY, LLC
12965 SW HERMAN RD STE 100
TUALATIN, OR 97062
P: 503.563.6151
F: 503.563.6152
aks-eng.com

ENGINEERING - SURVEYING - NATURAL RESOURCES
FORESTRY - PLANNING - LANDSCAPE ARCHITECTURE

MANDEL FARMS SUBDIVISION

OREGON
WASHINGTON COUNTY TAX MAP 2S 1 30CB
SHERWOOD
TAX LOTS 250 AND 251

PRELIMINARY SUBDIVISION PLAT

DESIGNED BY:	PAS/DS
DRAWN BY:	DS
CHECKED BY:	PAS
SCALE:	AS NOTED

DATE: 01-08-2016

REGISTERED PROFESSIONAL LAND SURVEYOR
OREGON
JULY 09, 2003
ALEXANDER H. HURLEY
56539LS
RENEWS: 6/30/17

PRELIMINARY NOT FOR CONSTRUCTION

REVISIONS

JOB NUMBER
4570

SHEET
P04

AKS DRAWING FILE: P05 PLAT.DWG | LAYOUT: P05

REQUIRED SETBACKS

FRONT YARD:	14 FT
FRONT GARAGE:	20 FT
SIDE YARD:	5 FT
CORNER LOT SIDE YARD:	15 FT
*REAR YARD:	20 FT

*14' REAR YARD SETBACK PROPOSED ADJACENT TO VEGETATED CORRIDOR FOR LOTS 28-31, 36-37, & 53.

REDUCED SETBACK AREA: ±2,034 SF

PROPOSED SETBACK MITIGATION AREA (TRACT 'C'): ±2,155 SF

DENSITY CALCULATIONS

GROSS SITE AREA:	±973,600 SF (±22.35 AC)
PUBLIC R.O.W. DEDICATION:	±166,166 SF (±3.81 AC)
SENSITIVE LANDS TRACTS (VEGETATED CORRIDOR & WETLANDS):	±249,491 SF (±5.72 AC)
NET DEVELOPABLE AREA:	±557,943 SF (±12.81 AC)

OPEN SPACE REQUIRED (5% OF NET DEVELOPABLE):	±27,897 SF
TRACT A OPEN SPACE:	±6,252 SF
TRACT B OPEN SPACE:	±1,987 SF
TRACT D OPEN SPACE:	±5,965 SF
TRACT F OPEN SPACE:	±2,953 SF
TRACT H OPEN SPACE:	±30,872 SF
TOTAL OPEN SPACE PROVIDED:	±48,029 SF

MINIMUM LOT AREA: 5,000 SF

STORMWATER FACILITY: ±12,611 SF (±0.29 AC)

PROPOSED UNIT DENSITY: 86 UNITS

PROPOSED AVERAGE LOT DENSITY (86 UNITS/12.81 AC): ±6.71 UNITS/AC

SCALE 1" = 60 FEET

60 0 24 36 48 60

AKS ENGINEERING & FORESTRY, LLC
12965 SW HERMAN RD STE 100
TUALATIN, OR 97062
P: 503.563.6151
F: 503.563.6152
aks-eng.com

ENGINEERING · SURVEYING · NATURAL RESOURCES
FORESTRY · PLANNING · LANDSCAPE ARCHITECTURE

MANDEL FARMS SUBDIVISION

SHERWOOD OREGON

TAX LOTS 250 AND 251 WASHINGTON COUNTY TAX MAP 2S 1 30CB

PRELIMINARY BUILDING SETBACKS PLAN

DESIGNED BY:	PAS/DS
DRAWN BY:	DS
CHECKED BY:	PAS
SCALE:	AS NOTED
DATE:	01-08-2016

REGISTERED PROFESSIONAL LAND SURVEYOR
PRELIMINARY NOT FOR CONSTRUCTION
OREGON
JULY 09, 2003
ALEXANDER H. HURLEY
58539LS
RENEWS: 6/30/17

REVISIONS

JOB NUMBER 4570

SHEET P05

AKS DRAWING FILE: P04 SETBACKS.DWG | LAYOUT: P04

SCALE 1" = 60 FEET

60 0 24 36 48 60

LEGEND

EXISTING GROUND CONTOUR (1 FT)	
EXISTING GROUND CONTOUR (5 FT)	350
FINISHED GRADE CONTOUR (1 FT)	
FINISHED GRADE CONTOUR (5 FT)	345
	CONIFEROUS / DECIDUOUS
EXISTING TREES TO BE PRESERVED	
EXISTING TREE TO BE REMOVED	
ORANGE SEDIMENT FENCE TO SERVE AS TREE PROTECTION FENCE	
TREE PROTECTION FENCE (4-FT ORANGE PLASTIC CONSTRUCTION OR APPROVED EQUIVALENT)	

AKS ENGINEERING & FORESTRY, LLC
12965 SW HERMAN RD STE 100
TUALATIN, OR 97062
P: 503.563.6151
F: 503.563.6152
aks-eng.com

ENGINEERING · SURVEYING · NATURAL RESOURCES
FORESTRY · PLANNING · LANDSCAPE ARCHITECTURE

MANDEL FARMS SUBDIVISION

SHERWOOD OREGON

TAX LOTS 250 AND 251 WASHINGTON COUNTY TAX MAP 2S 1 30CB

PRELIMINARY TREE PRESERVATION AND REMOVAL PLAN

DESIGNED BY:	DS
DRAWN BY:	DS
CHECKED BY:	BRB
SCALE:	AS NOTED
DATE: 01-08-2016	

PRELIMINARY NOT FOR CONSTRUCTION

REVISIONS

JOB NUMBER 4570

SHEET **P06**

PN CERTIFIED ARBORIST

BRUCE R. BALDWIN
CERTIFICATE NUMBER: PN-6666A
EXPIRATION DATE: 12/31/17

AKS DRAWING FILE: P05 TREE.DWG | LAYOUT: P05

PRUNING/TREE REMOVAL NOTES:

THE WORK TO BE COMPLETED UNDER THIS PROJECT SHALL CONSIST OF TREE REMOVAL AND TREE TRIMMING AS LISTED.

1. THE CONTRACTOR SHALL PROVIDE ADEQUATE CREW OF MEN, EQUIPMENT AND MATERIALS TO SAFELY AND EFFICIENTLY COMPLETE THE ASSIGNED WORK. EACH SUCH CREW SHALL INCLUDE AN INDIVIDUAL WHO SHALL BE DESIGNATED AS THE CREW SUPERVISOR AND WHO SHALL BE RESPONSIBLE FOR THE CREW'S ACTIVITIES AND WHO SHALL RECEIVE INSTRUCTION FROM THE OWNER OR THE OWNER'S REPRESENTATIVE AND DIRECT THE CREW TO ACCOMPLISH SUCH WORK.
2. WHENEVER A TREE, WHICH IS NOT SCHEDULED TO BE REMOVED, MUST BE TRIMMED OR PRUNED, THE CONTRACTOR SHALL ENSURE THAT SUCH TRIMMING AND PRUNING IS CARRIED OUT UNDER THE DIRECT SUPERVISION OF A CERTIFIED ARBORIST. ALL PRUNING AND TRIMMING SHALL BE PERFORMED IN ACCORDANCE WITH THE PROVISIONS OF ANSI A 300 "STANDARD PRACTICES FOR TREE, SHRUB AND OTHER WOODY PLANT MAINTENANCE".
3. THE CONTRACTOR SHALL BE REQUIRED TO CUT TREES TO A HEIGHT OF APPROXIMATELY 12". THE STUMPS AND ROOTS SHALL BE GROUND DOWN A MINIMUM OF TWELVE (12) INCHES BELOW NORMAL GROUND LEVEL.
4. ALL STUMPS OF TREES TO BE REMOVED WITHIN TREE ROOT PROTECTION ZONES OF TREES TO BE PRESERVED ARE TO BE GROUND OR LEFT IN PLACE SO AS NOT TO DISTURB THE ROOTS OF ADJACENT TREES TO BE PRESERVED.
5. THE CONTRACTOR SHALL PERFORM ALL WORK IN ACCORDANCE WITH THE LATEST GOVERNMENTAL SAFETY REGULATIONS. ALL WORK SHALL BE PERFORMED IN STRICT ACCORDANCE WITH ANSI Z133.1 "PRUNING, TRIMMING, REPAIRING, MAINTAINING AND REMOVING TREES AND CUTTING BRUSH–SAFETY REQUIREMENTS" WITH SPECIAL EMPHASIS GIVEN TO THE REQUIREMENT THAT ONLY QUALIFIED LINE–CLEARANCE TREE TRIMMERS BE ASSIGNED TO WORK WHERE A POTENTIAL ELECTRICAL HAZARD EXISTS.
6. THE CONTRACTOR SHALL MAKE ALL THE NECESSARY ARRANGEMENTS WITH ANY UTILITY THAT MUST BE PROTECTED OR RELOCATED IN ORDER TO ACCOMPLISH THE WORK. THE CONTRACTOR SHALL BE SOLELY RESPONSIBLE FOR THE PROTECTION OF THE OPERATING CONDITION OF ALL ACTIVE UTILITIES WITHIN THE AREA OF CONSTRUCTION AND HE SHALL TAKE ALL NECESSARY PRECAUTIONS TO AVOID DAMAGE TO EXISTING UTILITIES.
7. ANY MATERIAL RESULTING FROM THE TRIMMING OR REMOVAL OF ANY TREES SHALL BECOME THE RESPONSIBILITY OF THE CONTRACTOR.
8. HAZARDOUS TREES–REPORTING – ANY PERSON ENGAGED IN TRIMMING OR PRUNING WHO BECOMES AWARE OF A TREE OF DOUBTFUL STRENGTH, THAT COULD BE DANGEROUS TO PERSONS OR PROPERTY, SHALL REPORT SUCH TREE(S) TO THE OWNER OR THE OWNERS REPRESENTATIVE. SUCH TREES SHALL INCLUDE THOSE THAT ARE OVER MATURE, DISEASED, OR SHOWING SIGNS OF DECAY.
9. DAMAGES–ANY DAMAGE CAUSED BY THE CONTRACTOR, INCLUDING, BUT NOT LIMITED TO, BROKEN SIDEWALK, CURB, RUTTED LAWN, BROKEN WATER SHUT–OFFS, WIRE DAMAGE, BUILDING DAMAGE, STREET DAMAGE, ETC., WILL BE REPAIRED OR REPLACED IN A TIMELY MANNER, TO THE OWNER'S SATISFACTION, AND ALL COSTS PAID BY THE CONTRACTOR.
10. ANY BRUSH CLEARING REQUIRED WITHIN THE TREE PROTECTION ZONE SHALL BE ACCOMPLISHED WITH HAND OPERATED EQUIPMENT.
11. TREES TO BE REMOVED SHALL BE FELLED SO AS TO FALL AWAY FROM TREE ROOT PROTECTION ZONES AND TO AVOID PULLING AND BREAKING OF ROOTS TO REMAIN.
12. ALL DOWNED BRUSH AND TREES SHALL BE REMOVED FROM THE TREE ROOT PROTECTION ZONE EITHER BY HAND OR WITH EQUIPMENT SITTING OUTSIDE THE TREE ROOT PROTECTION ZONE. EXTRACTION SHALL OCCUR BY LIFTING THE MATERIAL OUT, NOT BY SKIDDING IT ACROSS THE GROUND.
13. IF TEMPORARY HAUL OR ACCESS ROADS MUST PASS OVER THE ROOT AREA OF TREES TO BE RETAINED A ROADBED OF 6 INCHES OF MULCH OR GRAVEL SHALL BE CREATED TO PROTECT THE SOIL. THE ROADBED MATERIAL SHALL BE REPLENISHED AS NECESSARY TO MAINTAIN A 6–INCH DEPTH.
14. PRUNING. TREES SHALL BE PRUNED PRIOR TO THE START OF CONSTRUCTION. TREES SHALL BE CROWN CLEANED TO REMOVE THE DEADWOOD 2 INCHES IN DIAMETER AND OVER. TREES SHALL BE CROWN THINNED BY 10–20%. CROWNS MAY BE RAISED BY REMOVING BOTTOM BRANCHES AS NECESSARY UP TO 14 FEET HIGH TO GIVE CLEARANCE FOR ANY CONSTRUCTION TRAFFIC, ACTIVITIES, ETC. ALL WORK TO BE DONE IN ACCORDANCE WITH ANSI A300 PRUNING STANDARDS.
15. CUT BRANCHES AND ROOTS WITH SHARP PRUNING INSTRUMENTS THAT DO NOT CHOP OR TEAR.
16. LARGE HOLES FROM ROOT BALL REMOVAL SHALL BE REPLACED WITH COMPACTED STRUCTURAL FILL TO FINISHED GRADE.
17. **STUMPS SHALL BE GROUND AS NECESSARY SO AS NOT TO CAUSE DAMAGE TO THE ROOT ZONES OF ADJACENT TREES TO BE PRESERVED ON THE SUBJECT PARCEL OR ABUTTING PARCELS. STUMPS NEAR PROPERTY LINES SHALL ALSO BE GROUND AS NECESSARY SO AS NOT TO CAUSE DISTURBANCE TO ADJACENT PARCELS.**

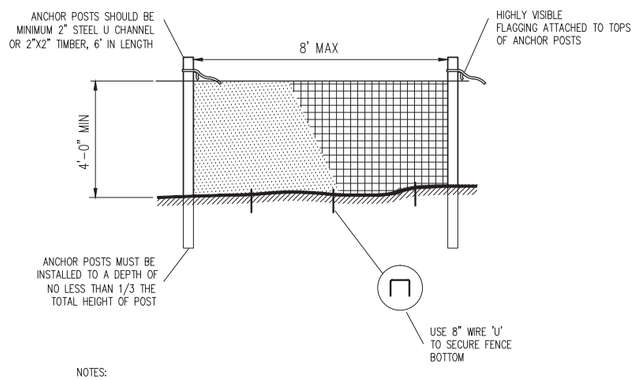

NOTES:
1. BLAZE ORANGE OR BLUE PLASTIC MESH FENCE FOR TREE PROTECTION DEVICE, ONLY.
2. BOUNDARIES OF PROTECTION AREA SHALL BE MARKED IN THE FIELD BY THE ARBORIST PRIOR TO CONSTRUCTION
3. BOUNDARIES OF PROTECTION AREA SHOULD BE STAKED AND FLAGGED BY THE ARBORIST PRIOR TO INSTALLING DEVICES.
4. AVOID DAMAGE TO CRITICAL ROOT ZONE. DO NOT DAMAGE OR SEVER LARGE ROOTS WHEN INSTALLING POSTS.
5. DEVICE SHOULD BE MAINTAINED THROUGHOUT CONSTRUCTION.

TREE PROTECTION FENCE DETAIL

TREE PRESERVATION NOTES:

A. PLACING MATERIALS NEAR TREES.
NO PERSON MAY CONDUCT ANY ACTIVITY WITHIN THE PROTECTED AREA OF ANY TREE DESIGNATED TO REMAIN, INCLUDING, BUT NOT LIMITED TO, PARKING EQUIPMENT, PLACING SOLVENTS, STORING BUILDING MATERIAL AND SOIL DEPOSITS AND DUMPING CONCRETE WASHOUT.

B. ATTACHMENTS TO TREES.
DURING CONSTRUCTION, NO PERSON SHALL ATTACH ANY OBJECT TO ANY TREE DESIGNATED FOR PROTECTION.

C. PROTECTIVE BARRIER.
BEFORE DEVELOPMENT, LAND CLEARING, FILLING, OR ANY LAND ALTERATION FOR WHICH A TREE REMOVAL PERMIT IS REQUIRED, THE CONTRACTOR:

1. SHALL ERECT AND MAINTAIN READILY VISIBLE PROTECTIVE TREE FENCING ALONG THE OUTER EDGE AND COMPLETELY SURROUNDING THE PROTECTED AREA OF ALL PROTECTED TREES. A CONSTRUCTION FENCE MUST BE PLACED AROUND EACH TREE AT THE EDGE OF THE TREE ROOT PROTECTION ZONE. THE FENCE MUST BE PLACED BEFORE CONSTRUCTION STARTS AND REMAIN IN PLACE UNTIL CONSTRUCTION IS COMPLETE. SEE TREE PROTECTION FENCE DETAIL.
2. MAY BE REQUIRED TO COVER WITH MULCH TO A DEPTH OF AT LEAST SIX (6) INCHES OR WITH PLYWOOD OR SIMILAR MATERIAL TO THE AREAS ADJOINING THE TREE ROOT PROTECTION ZONE IN ORDER TO PROTECT ROOTS FROM DAMAGE CAUSED BY HEAVY EQUIPMENT.
3. SHALL PROHIBIT EXCAVATION OR COMPACTING OF EARTH OR OTHER POTENTIALLY DAMAGING ACTIVITIES WITHIN THE BARRIERS.
4. MAY BE REQUIRED TO MINIMIZE ROOT DAMAGE BY EXCAVATING A TWO (2) FOOT DEEP TRENCH, AT EDGE OF TREE ROOT PROTECTION ZONE, TO CLEANLY SEVER THE ROOTS OF TREES TO BE RETAINED. ROOTS 1" IN DIAMETER OR GREATER SHALL BE CLEANLY CUT WITH A SAW OR PRUNERS.
5. MAY BE REQUIRED TO HAVE CORRECTIVE PRUNING PERFORMED ON PROTECTED TREES IN ORDER TO AVOID DAMAGE FROM MACHINERY OR BUILDING ACTIVITY. MAY BE REQUIRED TO MAINTAIN TREES THROUGHOUT CONSTRUCTION PERIOD BY WATERING AND FERTILIZING.
6. SHALL MAINTAIN THE PROTECTIVE BARRIERS IN PLACE UNTIL THE PROJECT ARBORIST AUTHORIZES THEIR REMOVAL OR A FINAL CERTIFICATE OF OCCUPANCY IS ISSUED, WHICHEVER OCCURS FIRST.
7. SHALL ENSURE THAT ANY LANDSCAPING DONE IN THE TREE ROOT PROTECTION ZONE SUBSEQUENT TO THE REMOVAL OF THE BARRIERS SHALL BE ACCOMPLISHED WITH LIGHT MACHINERY OR HAND LABOR. SEE NOTES ON THE LANDSCAPE PLAN.

D. GRADE
1. THE GRADE SHALL NOT BE ELEVATED OR REDUCED WITHIN THE TREE ROOT PROTECTION ZONE OF TREES TO BE PRESERVED WITHOUT THE PROJECT ARBORIST'S AUTHORIZATION. THE PROJECT ARBORIST MAY ALLOW COVERAGE OF UP TO ONE HALF OF THE AREA OF THE TREE'S ROOT PROTECTION ZONE WITH LIGHT SOILS (NO CLAY) TO THE MINIMUM DEPTH NECESSARY TO CARRY OUT GRADING OR LANDSCAPING PLANS, IF IT WILL NOT IMPERIL THE SURVIVAL OF THE TREE. AERATION DEVICES MAY BE REQUIRED TO ENSURE THE TREE'S SURVIVAL.
2. IF THE GRADE ADJACENT TO A PRESERVED TREE IS RAISED SUCH THAT IT COULD SLOUGH OR ERODE INTO THE TREE'S ROOT PROTECTION ZONE, IT SHALL BE PERMANENTLY STABILIZED TO PREVENT SUFFOCATION OF THE ROOTS.
3. THE APPLICANT SHALL NOT INSTALL AN IMPERVIOUS SURFACE WITHIN THE TREE ROOT PROTECTION ZONE OF ANY TREE TO BE RETAINED WITHOUT THE AUTHORIZATION OF THE PROJECT ARBORIST. THE PROJECT ARBORIST MAY REQUIRE SPECIFIC CONSTRUCTION METHODS AND/OR USE OF AERATION DEVICES TO ENSURE THE TREE'S SURVIVAL AND TO MINIMIZE THE POTENTIAL FOR ROOT INDUCED DAMAGE TO THE IMPERVIOUS SURFACE.
4. TO THE GREATEST EXTENT PRACTICAL, UTILITY TRENCHES SHALL BE LOCATED OUTSIDE OF THE TREE ROOT PROTECTION ZONE OF TREES TO BE RETAINED. THE PROJECT ARBORIST MAY REQUIRE THAT UTILITIES BE TUNNELED UNDER THE ROOTS OF TREES TO BE RETAINED IF THE PROJECT ARBORIST DETERMINES THAT TRENCHING WOULD SIGNIFICANTLY REDUCE THE CHANCES OF THE TREES SURVIVAL.
5. TREES AND OTHER VEGETATION TO BE RETAINED SHALL BE PROTECTED FROM EROSION AND SEDIMENTATION. CLEARING OPERATIONS SHALL BE CONDUCTED SO AS TO EXPOSE THE SMALLEST PRACTICAL AREA OF SOIL TO EROSION FOR THE LEAST POSSIBLE TIME. TO CONTROL EROSION, SHRUBS, AND GROUND COVER SHALL BE MAINTAINED WHERE FEASIBLE. WHERE NOT FEASIBLE APPROPRIATE EROSION CONTROL PRACTICES SHALL BE IMPLEMENTED.

E. DIRECTIONAL FELLING OF TREES SHALL BE USED TO AVOID DAMAGE TO TREES DESIGNATED FOR RETENTION.

F. ADDITIONAL REQUIREMENTS.
THE PROJECT ARBORIST MAY REQUIRE ADDITIONAL TREE PROTECTION MEASURES WHICH ARE CONSISTENT WITH ACCEPTED URBAN FORESTRY PRACTICES.

GENERAL TREE NOTES:

1. THE TREE INFORMATION SHOWN IN THE TREE PRESERVATION AND REMOVAL TABLES IS BASED ON A TOPOGRAPHIC SURVEY PERFORMED IN JAN–FEB 2014.
2. TREE PROTECTION SHALL BE INSTALLED PRIOR TO CONSTRUCTION AND REMAIN IN PLACE UNTIL CONSTRUCTION IS COMPLETED.
3. THE PROJECT ARBORIST MUST BE ON SITE DURING ANY WORK WITHIN THE TREE ROOT PROTECTION ZONE.
4. CONSTRUCTION WITHIN THE TREE ROOT PROTECTION ZONE IS ACCEPTABLE WITH PROJECT ARBORIST APPROVAL. ENCROACHMENT INTO THE TREE ROOT PROTECTION ZONE IS ALLOWED WITH PROJECT ARBORIST APPROVAL AS DESCRIBED IN THE FOLLOWING NOTES:
   A. EXCAVATION IN THE TOP 24" OF THE SOIL IN THE TREE ROOT PROTECTION ZONE AREA SHOULD BEGIN AT THE EXCAVATION LINE THAT IS CLOSEST TO THE TREE.
   B. THE EXCAVATION SHOULD BE DONE BY HAND/SHOVEL OR WITH A BACKHOE AND A MAN WITH A SHOVEL, PRUNING SHEARS, AND A PRUNING SAW.
   C. IF DONE BY HAND, ALL ROOTS 1" OR LARGER SHOULD BE PRUNED AT THE EXCAVATION LINE.
   D. IF DONE WITH A BACKHOE (MOST LIKELY SCENARIO), THEN THE OPERATOR SHALL START THE CUT AT THE EXCAVATION LINE AND CAREFULLY "FEEL" FOR ROOTS/RESISTANCE. WHEN THERE IS RESISTANCE, THE MAN WITH THE SHOVEL HAND DIGS AROUND THE ROOTS AND PRUNES THE ROOTS LARGER THAN 1" DIAMETER.
   E. THE BACKHOE IS TO REMAIN OFF OF THE TREE ROOTS TO BE PRESERVED AT ALL TIMES.
   F. ALL ROOTS SHALL BE CUT CLEANLY WITH PRUNING SHEARS OR A PRUNING SAW.

AKS ENGINEERING & FORESTRY, LLC
12965 SW HERMAN RD STE 100
TUALATIN, OR 97062
P: 503.563.6151
F: 503.563.6152
aks-eng.com

ENGINEERING · SURVEYING · NATURAL RESOURCES
FORESTRY · PLANNING · LANDSCAPE ARCHITECTURE

MANDEL FARMS SUBDIVISION
SHERWOOD OREGON
TAX LOTS 250 AND 251
WASHINGTON COUNTY TAX MAP 2S 1 30DB

PRELIMINARY TREE NOTES

DESIGNED BY: DS
DRAWN BY: DS
CHECKED BY: BRB
SCALE: AS NOTED
DATE: 01–08–2016

PRELIMINARY NOT FOR CONSTRUCTION

REVISIONS

JOB NUMBER 4570

SHEET P07

ISA CERTIFIED ARBORIST
BRUCE R. BALDWIN
CERTIFICATE NUMBER: PN–5666A
EXPIRATION DATE: 12/31/17

AKS DRAWING FILE: P05 TREE.DWG | LAYOUT: P09

Detailed Tree Inventory for Mandel Farms Subdivision

AKS JOB NO. 4570

Tree ID	DBH (in.)	Tree Species Common Name *(Scientific name)*	Condition/Comments	Hazard Rating (1-4)*	Wind-throw Rating**	Remove / Preserve
10395	8	Basswood (*Tilia sp.*)	**OFFSITE**, Pruned, Fair condition	2	B	Remove
10396	7	Basswood (*Tilia sp.*)	**OFFSITE**, Pruned, Fair condition	2	B	Remove
10397	6	Basswood (*Tilia sp.*)	**OFFSITE**, Pruned, Fair condition	2	B	Remove
10398	7	Basswood (*Tilia sp.*)	**OFFSITE**, Pruned, Fair condition	2	B	Remove
10399	6	Basswood (*Tilia sp.*)	**OFFSITE**, Pruned, Fair condition	2	B	Remove
10400	6	Basswood (*Tilia sp.*)	**OFFSITE**, Pruned, Fair condition	2	B	Remove
10401	7	Basswood (*Tilia sp.*)	**OFFSITE**, Pruned, Fair condition	2	B	Remove
10402	6	Basswood (*Tilia sp.*)	**OFFSITE**, Pruned, Fair condition	2	B	Remove
10403	6	Basswood (*Tilia sp.*)	**OFFSITE**, Pruned, Fair condition	2	B	Remove
10404	6	Basswood (*Tilia sp.*)	**OFFSITE**, Pruned, Fair condition	2	B	Remove
10405	6	Basswood (*Tilia sp.*)	**OFFSITE**, Pruned, Fair condition	2	B	Remove
10406	6	Basswood (*Tilia sp.*)	**OFFSITE**, Pruned, Fair condition	2	B	Remove
10407	6	Basswood (*Tilia sp.*)	**OFFSITE**, Pruned, Fair condition	2	B	Remove
10408	6	Basswood (*Tilia sp.*)	**OFFSITE**, Pruned, Fair condition	2	B	Remove
10409	7	Basswood (*Tilia sp.*)	**OFFSITE**, Pruned, Fair condition	2	B	Remove
10410	6	Basswood (*Tilia sp.*)	**OFFSITE**, Pruned, Fair condition	2	B	Remove
10638	10	Cherry (*Prunus sp.*)	**OFFSITE**, Pruned, Fair condition	2	B	Preserve
10639	11	Cherry (*Prunus sp.*)	**OFFSITE**, Pruned, Sparse foliage, Fair condition	2	B	Preserve
10640	6	Cherry (*Prunus sp.*)	**OFFSITE**, Pruned, Lean (S), Crooked, Some decay, Fair condition	2	B	Preserve
12477	7,7,8,12	Apple (*Malus sp.*)	Codominant, Pruned, Cracks, Decay, Poor condition	3	C	Preserve
12478	12	Cherry (*Prunus sp.*)	Covered in Blackberry, Some dead foliage, Fair condition	2	B	Preserve
12488	6,7,7, 7,7,7	Oregon Ash (*Fraxinus latifolia*)	**OFFSITE**, Codominant, Some dead foliage, Fair condition	2	B	Preserve
12658	23	Bigleaf Maple (*Acer macrophyllum*)	Cavities with decay, Some broken branches, Fair condition	3	B	Remove
12669	10,10,11	Apple (*Malus sp.*)	Codominant, Topped, Pruned, Cracked bark, Decay, Bore holes, Poor condition	3	C	Remove
12709	10,11	Plum (*Prunus sp.*)	Codominant, Pruned, Cavity with decay at base, Fair condition	2	B	Remove
12710	37	Black Locust (*Robinia pseudoacacia*)	Crooked, Many bulges, Codominant 10' from base, Fair condition	2	B	Remove
12711	24	Black Locust (*Robinia pseudoacacia*)	Lean (W), Crooked, Fair condition	2	B	Remove
12712	15	Maple (*Acer sp.*)	lean (SW), Dead, Poor condition	3	C	Remove
12713	15	Cherry (*Prunus sp.*)	Many large bulges, Decay, Crooked, Bore holes, Pruned, Topped, Poor condition	3	C	Remove
12714	39	Douglas-fir (*Pseudotsuga menziesii*)	Pruned, Fair condition	3	B	Remove
12715	22	Maple (*Acer sp.*)	Codominant 8' up from base with included bark, Crooked, Pruned, Fair condition	2	B	Remove
12726	24	Sweet Cherry (*Prunus avium*)	Pruned, Broken branches, Large bulge at base, Cracks, Decay, Poor condition	3	C	Remove
12727	25	Pear (*Pyrus sp.*)	Pruned with decay, Large cavity at base with decay, Bulge at base, Poor condition	4	C	Remove
12728	28	Pear (*Pyrus sp.*)	Large cavities with decay, Dead branches, Decay, Pruned, Poor condition	4	C	Remove
12732	6,6,8	Holly (*Illex sp.*)	Codominant, Bore holes, Topped, Pruned, Broken branches, Poor condition	3	C	Remove
12733	22	Black Locust (*Robinia pseudoacacia*)	Good condition	2	B	Remove
12735	30	Engelmann Spruce (*Picea engelmannii*)	Epicormic branching, Pruned with sap flow, Some dead foliage, Fair condition	3	B	Remove
12736	11	Cherry (*Prunus sp.*)	Large cavity, Decay, Bore holes, Broken branches, Topped, Poor condition	3	C	Remove
12767	9,11,15, 17	Cherry (*Prunus sp.*)	Pruned, Cracked bark, Decay, Poor condition	3	C	Remove
12768	18,18	Black Locust (*Robinia pseudoacacia*)	Codominant with included bark, Good condition	2	B	Remove
12772	13	Black Locust (*Robinia pseudoacacia*)	Lean (N), Crooked, Fair condition	2	B	Remove
12787	6	Cherry (*Prunus sp.*)	Pruned, Fair condition	2	B	Preserve
12788	11,11	Apple (*Malus sp.*)	Codominant, Some decay, Fair condition	2	B	Preserve
12789	7,8	Apple (*Malus sp.*)	Lean (S), Crooked, Good condition	1	A	Preserve
13395	28	Bigleaf Maple (*Acer macrophyllum*)	**OFFSITE**, Codominant 5' up from base, Pruned, Cracked bark, Fair condition	2	B	Preserve
13400	21,25	Cherry (*Prunus sp.*)	**OFFSITE**, Cavity with decay, Conk, Pruned, Crooked, Fair condition	2	B	Preserve
13403	14	Cherry (*Prunus sp.*)	**OFFSITE**, Lean (N), Pruned, Crooked, Fair condition	2	B	Preserve
13432	17	Oregon Ash (*Fraxinus latifolia*)	**OFFSITE**, Cavity, Cracked bark, Fair condition	2	B	Preserve
13464	36	Douglas-fir (*Pseudotsuga menziesii*)	**OFFSITE**, Pruned, Bulge at base, Good condition	3	B	Preserve
13854	7,10,10, 12	Cherry (*Prunus sp.*)	Codominant, Cracks with decay, Some branches on ground, Fair condition	2	B	Preserve
13855	8	Cherry (*Prunus sp.*)	Crooked, Lean (S), Fair condition	2	B	Preserve
13856	6	Cherry (*Prunus sp.*)	Lean (E), Almost uprooted, Fair condition	2	B	Preserve
13858	10,13,14	Cherry (*Prunus sp.*)	Cracks, Decay, Poor condition	3	C	Preserve
13859	11,14	Cherry (*Prunus sp.*)	Cracks, Decay, Resting on ground, Poor condition	3	C	Preserve
13905	6	Cherry (*Prunus sp.*)	Crooked, Fair condition	2	B	Preserve
13906	9	Cherry (*Prunus sp.*)	Codominant, Lean (W), Hooked butt, Fair condition	2	B	Preserve
13907	11	Cherry (*Prunus sp.*)	Severe lean (W), Hooked butt, Cracks, Cavity, Decay, Poor condition	3	B	Preserve

Detailed Tree Inventory for Mandel Farms Subdivision

AKS JOB NO. 4570

Tree ID	DBH (in.)	Tree Species Common Name *(Scientific name)*	Condition/Comments	Hazard Rating (1-4)*	Wind-throw Rating**	Remove / Preserve
13908	6	Cherry (*Prunus sp.*)	Severe lean (W), Sparse foliage, Poor condition	2	B	Preserve
13909	6	Cherry (*Prunus sp.*)	Codominant 5' up from base, Good condition	1	A	Preserve
13910	6	Cherry (*Prunus sp.*)	Lean (E), Crooked, Fair condition	2	B	Preserve
13911	6	Cherry (*Prunus sp.*)	Lean (SE), Crooked, Fair condition	2	B	Preserve
13913	7,7	Cherry (*Prunus sp.*)	Codominant, Lean (SW), Some decay, Fair condition	2	B	Preserve
13914	11	Cherry (*Prunus sp.*)	Lean (N), Crooked, Fair condition	2	B	Preserve
13915	7	Cherry (*Prunus sp.*)	On ground, Decay, Cracks, Cavity, Poor condition	3	C	Preserve
13921	48	Western Redcedar (*Thuja plicata*)	Crooked, Cavity, Bore holes, 25% of foliage dead, Fair condition	2	B	Remove
13932	10	Black Hawthorn (*Crataegus douglasii*)	Lean (NE), Fair condition	2	B	Preserve
13933	8,8	Black Hawthorn (*Crataegus douglasii*)	Lean (NE), Fair condition	2	B	Preserve
13934	9	Black Hawthorn (*Crataegus douglasii*)	Lean (NE), Fair condition	2	B	Preserve
13935	6	Black Hawthorn (*Crataegus douglasii*)	Lean (N), Cracks, Cavity with decay, Sparse foliage, Poor condition	3	C	Preserve
13936	10	Black Hawthorn (*Crataegus douglasii*)	Lean (E), Crooked, Fair condition	2	B	Preserve
13937	7	Black Hawthorn (*Crataegus douglasii*)	Lean (N), Crooked, Fair condition	2	B	Preserve
13938	9	Black Hawthorn (*Crataegus douglasii*)	Lean (SW), Fair condition	2	B	Preserve
13939	7	Black Hawthorn (*Crataegus douglasii*)	Lean (NE), Suppressed, Fair condition	2	B	Preserve
13999	22,23	Bigleaf Maple (*Acer macrophyllum*)	Codominant with included bark, Crooked, Fair condition	2	B	Preserve
14020	6,9,12,13	Bigleaf Maple (*Acer macrophyllum*)	Codominant, Cracks, Decay, Cracked bark, Fair condition	3	B	Preserve
14022	65	Douglas-fir (*Pseudotsuga menziesii*)	Codominant 15' up from base with inlcuded bark, Pruned, Fair condition	3	B	Preserve
14254	6,7	Cherry (*Prunus sp.*)	Dead, Poor condition	3	C	Preserve
14255	20,25	Sweet Cherry (*Prunus avium*)	Codominant with included bark, Sap flow, Fair condition	2	B	Preserve
14257	8,11	Sweet Cherry (*Prunus avium*)	Codominant, Lean (W), Some decay, Fair condition	2	B	Preserve
14258	12	Sweet Cherry (*Prunus avium*)	Crooked, Lean (W), Fair condition	2	B	Preserve
14259	6	Cherry (*Prunus sp.*)	Sparse foliage, Fair condition	2	B	Preserve
14267	21	Douglas-fir (*Pseudotsuga menziesii*)	Crooked, Good condition	2	B	Remove
14268	12	Douglas-fir (*Pseudotsuga menziesii*)	Suppressed, Fair condition	1	A	Remove
14269	12	Douglas-fir (*Pseudotsuga menziesii*)	Suppressed, Fair condition	1	A	Remove
14270	17	Douglas-fir (*Pseudotsuga menziesii*)	Good condition	2	B	Remove
14271	14	Douglas-fir (*Pseudotsuga menziesii*)	Good condition	1	A	Remove
14272	7	Douglas-fir (*Pseudotsuga menziesii*)	Suppressed, Fair condition	1	A	Remove
14273	15	Douglas-fir (*Pseudotsuga menziesii*)	Good condition	1	A	Remove
14275	9	Sweet Cherry (*Prunus avium*)	Crooked, Lean (W), Fair condition	2	B	Remove
14280	9	Douglas-fir (*Pseudotsuga menziesii*)	Pruned, Suppressed, Fair condition	1	A	Preserve
14282	25	Douglas-fir (*Pseudotsuga menziesii*)	Pruned, Good condition	2	B	Preserve
14284	18	Douglas-fir (*Pseudotsuga menziesii*)	Good condition	2	B	Preserve
14287	6	Bigleaf Maple (*Acer macrophyllum*)	Lean (S), Good condition	1	A	Preserve
14289	7	Bigleaf Maple (*Acer macrophyllum*)	Lean (S), Good condition	1	A	Preserve
14291	33	Douglas-fir (*Pseudotsuga menziesii*)	Good condition	2	B	Preserve
14293	49	Douglas-fir (*Pseudotsuga menziesii*)	Epicormic branching, Crooked, Sweep, Fair condition	2	B	Preserve
14294	6,7	Bigleaf Maple (*Acer macrophyllum*)	Lean (S), Good condition	1	A	Preserve
14297	19	Bigleaf Maple (*Acer macrophyllum*)	Bulge at base, Dead top, Sparse foliage, Poor condition	3	C	Preserve
14298	16	Bigleaf Maple (*Acer macrophyllum*)	Crooked, Fair condition	2	B	Preserve
14299	12	Douglas-fir (*Pseudotsuga menziesii*)	Good condition	1	A	Preserve
14301	6	Cherry (*Prunus sp.*)	Dead, Poor condition	3	C	Preserve
14304	11,12,13, 15	Bigleaf Maple (*Acer macrophyllum*)	Codominant, Crooked, Fair condition	2	B	Preserve
14307	25	Western Redcedar (*Thuja plicata*)	Good condition	2	B	Preserve
14308	12	Western Redcedar (*Thuja plicata*)	Suppressed, Fair condition	1	A	Preserve
14311	24	Douglas-fir (*Pseudotsuga menziesii*)	Good condition	2	B	Preserve
14312	23	Western Redcedar (*Thuja plicata*)	Crooked, Codominant 8' up from base, Bore holes, Fair condition	2	B	Preserve
14313	9,19	Western Redcedar (*Thuja plicata*)	Many large bore holes, Codominant with included bark, Poor condition	3	C	Preserve
14314	28	Western Redcedar (*Thuja plicata*)	Crooked, Bore holes, Codominant top, Fair condition	2	B	Preserve
14315	25	Western Redcedar (*Thuja plicata*)	Lean (W), Dead lower limbs, Broken branches, Fair condition	2	B	Preserve
14316	22	Western Redcedar (*Thuja plicata*)	Lean (SW), Good condition	2	B	Preserve
14320	27	Douglas-fir (*Pseudotsuga menziesii*)	Sweep, Crooked, Epicormic branching, Fair condition	2	B	Preserve
14321	27	Douglas-fir (*Pseudotsuga menziesii*)	Sweep, Epicormic branching, Fair condition	2	B	Preserve
14324	14,17	Douglas-fir (*Pseudotsuga menziesii*)	Codominant, Good condition	2	B	Preserve
14327	28	Douglas-fir (*Pseudotsuga menziesii*)	Crooked, Fair condition	2	B	Preserve
14346	7,8,11,12	Bigleaf Maple (*Acer macrophyllum*)	Crooked, Fair condition	2	B	Preserve
14358	48	Douglas-fir (*Pseudotsuga menziesii*)	Some Broken branches, Epicormic branching, Fair condition	3	B	Preserve
14361	7,14,16	Pacific Madrone (*Arbutus menziesii*)	Codominant, Crooked, 14"-lean (E), 7"-lean (NW), Fair condition	2	B	Preserve
14364	6	Cherry (*Prunus sp.*)	Some dead foliage, Lean (E), Fair condition	2	B	Preserve
14391	28	Cherry (*Prunus sp.*)	Bulge at base, Cracks, Fair condition	2	B	Preserve
14442	10,10,10, 10	Bigleaf Maple (*Acer macrophyllum*)	Cracks, Severely pruned, Decay, Poor condition	3	C	Remove
14443	6	Bigleaf Maple (*Acer macrophyllum*)	Crooked, Good condition	1	A	Remove

Detailed Tree Inventory for Mandel Farms Subdivision

AKS JOB NO. 4570

Tree ID	DBH (in.)	Tree Species Common Name *(Scientific name)*	Condition/Comments	Hazard Rating (1-4)*	Wind-throw Rating**	Remove / Preserve
14445	7	Bigleaf Maple (*Acer macrophyllum*)	Crooked, Good condition	1	A	Remove
14446	8	Bigleaf Maple (*Acer macrophyllum*)	Suppressed, Fair condition	1	A	Preserve
14447	13	Bigleaf Maple (*Acer macrophyllum*)	Lean (N), Sparse foliage, Dead top, Poor condition	3	C	Preserve
14448	8	Douglas-fir (*Pseudotsuga menziesii*)	Suppressed, Fair condition	1	A	Preserve
14449	10	Bigleaf Maple (*Acer macrophyllum*)	Lean (N), Codominant top, 50% of bole covered with Ivy, Fair condition	2	B	Preserve
14451	15	Douglas-fir (*Pseudotsuga menziesii*)	Suppressed, 25% of bole covered in Ivy, Fair condition	2	B	Preserve
14452	47	Douglas-fir (*Pseudotsuga menziesii*)	Sap flow, Fair condition	3	B	Preserve
14453	22	Douglas-fir (*Pseudotsuga menziesii*)	Suppressed, Epicormic branching, Fair condition	2	B	Preserve
14454	6,6	Pacific Yew (*Taxus brevifolia*)	Codominant, Severely pruned, Fair condition	2	B	Remove
14461	13	Sweet Cherry (*Prunus avium*)	Crooked, Lean (N), Fair condition	2	B	Preserve
14463	45	Douglas-fir (*Pseudotsuga menziesii*)	Broken branches, Epicormic branching, Fair condition	3	B	Preserve
14465	6	Sweet Cherry (*Prunus avium*)	Lean (E), Crooked, High crown, Fair condition	2	B	Preserve
14467	6,7,7, 7,8	Bigleaf Maple (*Acer macrophyllum*)	Pruned, Bulge at base, Crooked, Fair condition	2	B	Preserve
14468	6,6,6, 7,7,8	Bigleaf Maple (*Acer macrophyllum*)	Pruned, Bulge at base, Crooked, Fair condition	2	B	Preserve
14471	6,7,7, 7,8,8	Bigleaf Maple (*Acer macrophyllum*)	Codominant, Crooked, Some decay, Fair condition	2	B	Preserve
14476	12	Bigleaf Maple (*Acer macrophyllum*)	Very crooked, Decay at base, Poor condition	3	C	Preserve
14478	8,10	Bigleaf Maple (*Acer macrophyllum*)	Broken branches with decay, Lean (NE), Fair condition	2	B	Preserve
14480	6,7,7	Bigleaf Maple (*Acer macrophyllum*)	Lean (N), Scars, Bulge at base, Fair condition	2	B	Preserve
14481	6,6	Bigleaf Maple (*Acer macrophyllum*)	Lean (N), Decay at base, Fair condition	2	B	Preserve
14483	13,13	Bigleaf Maple (*Acer macrophyllum*)	Codominant, Scar at base with decay, Fair condition	2	B	Preserve
14485	9,14	Bigleaf Maple (*Acer macrophyllum*)	Pruned with decay, Crooked, Fair condition	2	B	Preserve
14486	12	Bigleaf Maple (*Acer macrophyllum*)	Codominant top, Good condition	1	A	Preserve
14490	6,6,6	Bigleaf Maple (*Acer macrophyllum*)	Codominant, Good condition	1	A	Remove
14492	8	Cherry (*Prunus sp.*)	Severe Lean (N), Sparse foliage, Fair condition	2	B	Preserve
14498	17,30	Western Redcedar (*Thuja plicata*)	Codominant, Lean (E), Some broken branches, Fair condition	3	B	Preserve
14499	30	Douglas-fir (*Pseudotsuga menziesii*)	Good condition	2	B	Preserve
14500	18	Douglas-fir (*Pseudotsuga menziesii*)	Sweep, Dead lower limbs, Fair condition	2	B	Preserve
14501	12	Western Redcedar (*Thuja plicata*)	Suppressed, Fair condition	2	B	Preserve
14502	19	Douglas-fir (*Pseudotsuga menziesii*)	25% of bole covered with Ivy, Fair condition	2	B	Preserve
14503	35	Douglas-fir (*Pseudotsuga menziesii*)	Large butt swell, Epicormic branching, Pruned, Fair condition	3	B	Preserve
14504	12	Western Redcedar (*Thuja plicata*)	Suppressed, Fair condition	1	A	Preserve
14505	22	Douglas-fir (*Pseudotsuga menziesii*)	25% of bole covered with Ivy, Epicormic branching, Pruned, Fair condition	2	B	Preserve
14506	38	Douglas-fir (*Pseudotsuga menziesii*)	25% of bole covered with Ivy, Epicormic branching, Pruned, Fair condition	3	B	Preserve
30000	37	Douglas-fir (*Pseudotsuga menziesii*)	Crooked, Sweep, Fair condition	2	B	Preserve
30001	14,15,16	Bigleaf Maple (*Acer macrophyllum*)	50% of bole covered with Ivy, Crooked, Fair condition	2	B	Preserve
30002	16	Western Redcedar (*Thuja plicata*)	Sparse foliage (N), Good condition	2	B	Preserve
30003	10	Sweet Cherry (*Prunus avium*)	Lean (S), Suppressed, Fair condition	1	A	Preserve
30004	13	Hawthorn (*Crataegus sp.*)	Bore holes, Fair condition	2	B	Preserve
30005	13	Cherry (*Prunus sp.*)	Some dead foliage, Fair condition	2	B	Preserve
30006	9,9,9	Walnut (*Juglans sp.*)	Lean (E), Crooked, Fair condition	2	B	Preserve
30007	36	Western Redcedar (*Thuja plicata*)	Good condition	2	B	Preserve

Total # of Existing Trees Surveyed = 162

Total # of Existing Trees Onsite = 137

Total # of Trees to be Removed Onsite = 33

Total # of Trees to be Preserved Onsite = 104

Total # of Trees Offsite = 25

Total # of Trees to be Removed Offsite = 16

Total # of Trees to be Preserved Offsite = 9

***Hazard Rating:**

1 = Low Risk
2 = Moderate Risk
3 = High Risk
4 = Extreme Risk

****Wind-throw Rating:**

A = Most Wind-throw Resistant
B = Moderate Wind-throw Resistant
C = Least Wind-throw Resistant

Arborist Disclosure Statement:

Arborists are tree specialists who use their education, knowledge, training, and experience to examine trees, recommend measures to enhance the health of trees, and attempt to reduce the risk of living near trees. The Client and Jurisdiction may choose to accept or disregard the recommendations of the arborist, or seek additional advice. Arborists cannot detect every condition that could possibly lead to the structural failure of a tree. Trees are living organisms that fail in ways we do not fully understand. Conditions are often hidden within trees and below ground. Arborists cannot guarantee that a tree will be healthy or safe under all circumstances, or for a specified period of time. Likewise, remedial treatments, like medicine, cannot be guaranteed. Trees can be managed, but they cannot be controlled. To live near trees is to accept some degree of risk. The only way to eliminate all risk associated with trees is to eliminate all trees. Neither this author nor AKS Engineering & Forestry, LLC have assumed any responsibility for liability associated with the trees on or adjacent to this site.

At the completion of construction, all trees should once again be reviewed to evaluate their hazard rating. Land clearing and removal of adjacent trees can expose previously unseen defects and otherwise healthy trees can be damaged during construction.

AKS ENGINEERING & FORESTRY, LLC
12965 SW HERMAN RD STE 100
TUALATIN, OR 97062
P: 503.563.6151
F: 503.563.6152
aks-eng.com

ENGINEERING - SURVEYING - NATURAL RESOURCES
FORESTRY - PLANNING - LANDSCAPE ARCHITECTURE

MANDEL FARMS SUBDIVISION

SHERWOOD OREGON
TAX LOTS 250 AND 251
WASHINGTON COUNTY TAX MAP 2S 1 30CB

PRELIMINARY DETAILED TREE INVENTORY TABLE

DESIGNED BY: DS
DRAWN BY: DS
CHECKED BY: BRB
SCALE: AS NOTED
DATE: 01-08-2016

PRELIMINARY NOT FOR CONSTRUCTION

REVISIONS

JOB NUMBER 4570

SHEET P08

CERTIFIED ARBORIST
BRUCE R. BALDWIN
CERTIFICATE NUMBER: PN-6666A
EXPIRATION DATE: 12/31/17

AKS DRAWING FILE: P05 TREE.DWG | LAYOUT: P07

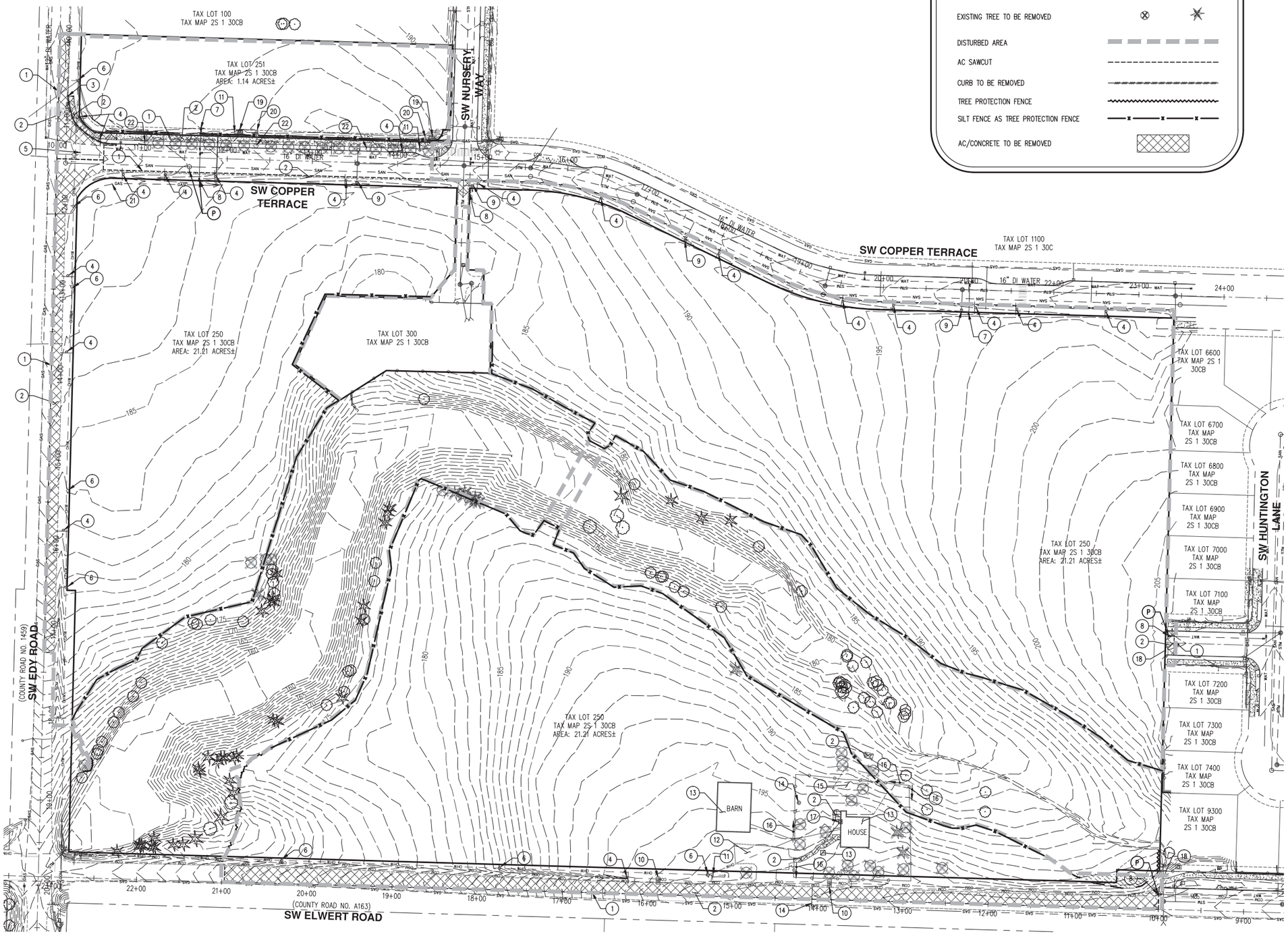

LEGEND

- EXISTING GROUND CONTOUR (1 FT)
- EXISTING GROUND CONTOUR (5 FT) — 200 —
- EXISTING TREE TO REMAIN
- EXISTING TREE TO BE REMOVED
- DISTURBED AREA
- AC SAWCUT
- CURB TO BE REMOVED
- TREE PROTECTION FENCE
- SILT FENCE AS TREE PROTECTION FENCE
- AC/CONCRETE TO BE REMOVED

KEYED DEMOLITION NOTES (#)

1. AC SAWCUT (TYP) – SAWCUT EXISTING AC/SIDEWALK AND CURB AS NEEDED FOR PROPOSED IMPROVEMENTS
2. REMOVE AND HAUL OFF EXISTING AC/SIDEWALK
3. REMOVE EXISTING CURB FOR PROPOSED IMPROVEMENTS
4. REMOVE/RELOCATE EXISTING ROAD SIGNS
5. REMOVE EXISTING STREET PAVEMENT MARKING
6. RELOCATE EXISTING POWER POLES/LIGHTS AND ASSOCIATED OHWS – CONTRACTOR TO COORDINATE WITH UTILITY PROVIDER AND DEVELOPER PRIOR TO BEGINNING WORK
7. REMOVE WATER BLOW-OFF VALVE ASSEMBLY AND CAP EXISTING WATER MAIN – CONTRACTOR TO COORDINATE WITH CITY OF SHERWOOD PROJECT INSPECTOR
8. REMOVE WATER BLOW-OFF VALVE ASSEMBLY AND EXTEND WATER MAIN PER PROPOSED UTILITY PLANS – CONTRACTOR TO COORDINATE WITH CITY SHERWOOD PROJECT INSPECTOR
9. REMOVE EXISTING STORM DRAIN DITCH INLET FOR STORM IMPROVEMENTS
10. REMOVE EXISTING MAIL BOX
11. REMOVE/RELOCATE EXISTING COMMUNICATION BOX AND CABLES – CONTRACTOR TO COORDINATE WITH UTILITY PROVIDER
12. REMOVE EXISTING GRAVEL AREA – CONTRACTOR TO COORDINATE WITH PROJECT GEOTECHNICAL ENGINEER AND DEVELOPER FOR POTENTIAL GRAVEL REUSE PRIOR TO HAULING OFFSITE
13. DEMOLISH AND HAUL OFF EXISTING BUILDING
14. DECOMMISSION AND CAP EXISTING WATER WELL
15. REMOVE EXISTING SEPTIC TANK/FIELD
16. REMOVE EXISTING FENCE AS SHOWN
17. COORDINATE WITH UTILITY PROVIDER TO REMOVE EXISTING GAS STRUCTURE
18. REMOVE EXISTING STREET/SIDEWALK BARRICADE
19. COORDINATE WITH UTILITY PROVIDER TO RELOCATE EXISTING POWER VAULT AND UNDERGROUND CABLES
20. COORDINATE WITH UTILITY PROVIDER TO RELOCATE EXISTING COMMUNICATION VAULT AND UNDERGROUND CABLES
21. COORDINATE WITH UTILITY PROVIDER TO REMOVE/RELOCATE EXISTING GAS LINE
22. EXISTING STREET LIGHTS TO BE RELOCATED – CONTRACTOR TO COORDINATE WITH UTILITY PROVIDER

NOTES:

1. CONTRACTOR TO COORDINATE THE REMOVAL OF ALL NECESSARY PRIVATE UTILITIES WITH THE APPROPRIATE UTILITY PROVIDERS
2. CONTRACTOR TO ABANDON EXISTING WELLS, SEPTIC TANKS, AND DRAIN FIELDS FOUND DURING CONSTRUCTION PER APPLICABLE LOCAL, STATE, AND FEDERAL REQUIREMENTS.

(P) CONTRACTOR TO POTHOLE AND VERIFY ALL UTILITY TIE IN ELEVATIONS PRIOR TO ORDERING STRUCTURES, PIPES AND ALL MATERIALS

AKS ENGINEERING & FORESTRY, LLC
12965 SW HERMAN RD STE 100
TUALATIN, OR 97062
P: 503.563.6151
F: 503.563.6152
aks-eng.com

ENGINEERING · SURVEYING · NATURAL RESOURCES
FORESTRY · PLANNING · LANDSCAPE ARCHITECTURE

MANDEL FARMS SUBDIVISION

SHERWOOD OREGON
TAX LOTS 250 AND 251 — WASHINGTON COUNTY TAX MAP 2S 1 30CB

PRELIMINARY DEMOLITION PLAN

DESIGNED BY:	PAS/DS
DRAWN BY:	DS
CHECKED BY:	PAS
SCALE:	AS NOTED
DATE:	01-08-2016

REGISTERED PROFESSIONAL ENGINEER — OREGON — PRELIMINARY NOT FOR CONSTRUCTION — PAUL A. SELLKE — 2011

RENEWAL DATE: 6/30/16

REVISIONS

JOB NUMBER 4570

SHEET P09

AKS DRAWING FILE: P07 DEMOLDWG | LAYOUT: P09

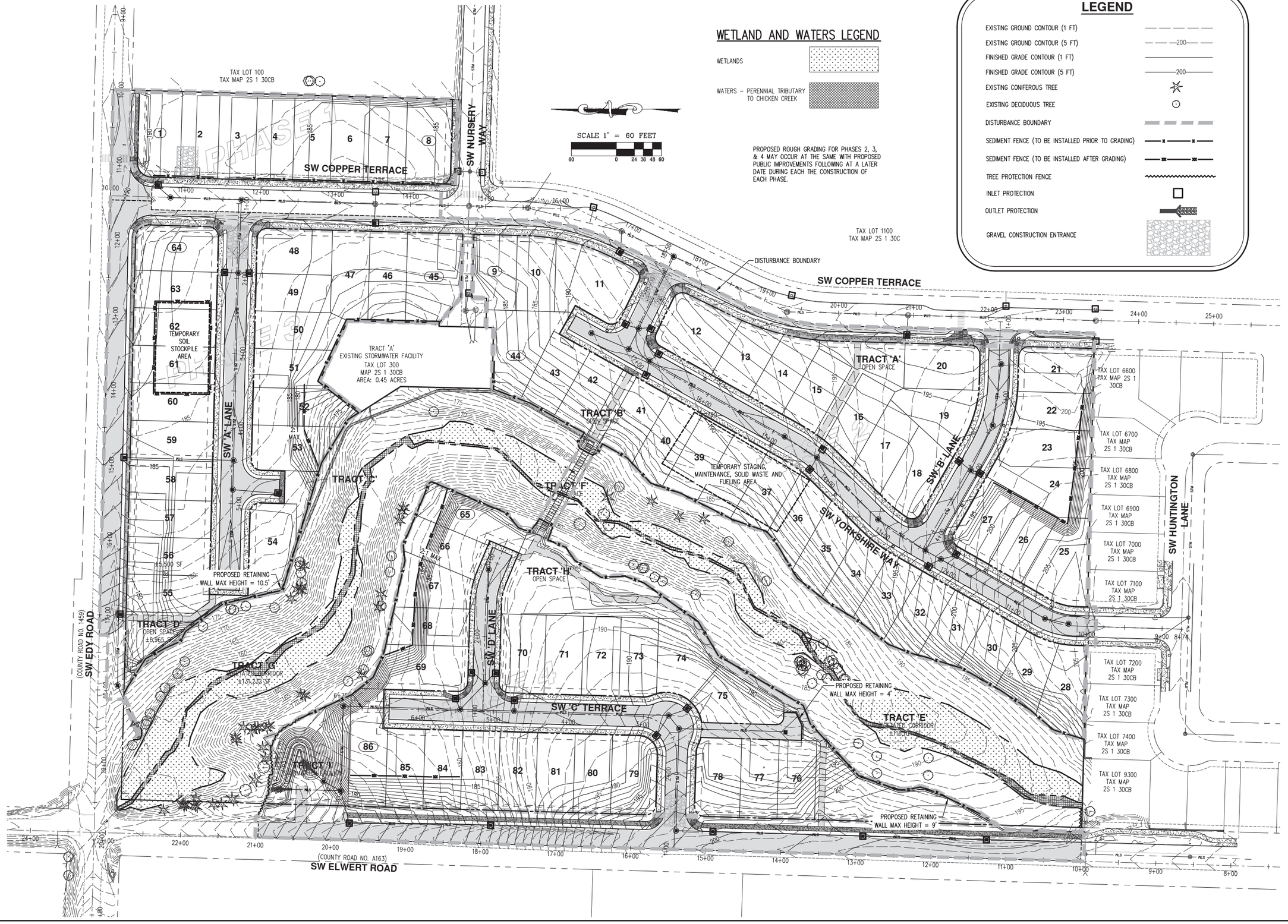

WETLAND AND WATERS LEGEND

WETLANDS

WATERS – PERENNIAL TRIBUTARY TO CHICKEN CREEK

LEGEND

- EXISTING GROUND CONTOUR (1 FT)
- EXISTING GROUND CONTOUR (5 FT) — 200
- FINISHED GRADE CONTOUR (1 FT)
- FINISHED GRADE CONTOUR (5 FT) — 200
- EXISTING CONIFEROUS TREE
- EXISTING DECIDUOUS TREE
- DISTURBANCE BOUNDARY
- SEDIMENT FENCE (TO BE INSTALLED PRIOR TO GRADING)
- SEDIMENT FENCE (TO BE INSTALLED AFTER GRADING)
- TREE PROTECTION FENCE
- INLET PROTECTION
- OUTLET PROTECTION
- GRAVEL CONSTRUCTION ENTRANCE

AKS ENGINEERING & FORESTRY, LLC
12965 SW HERMAN RD STE 100
TUALATIN, OR 97062
P: 503.563.6151
F: 503.563.6152
aks-eng.com

ENGINEERING · SURVEYING · NATURAL RESOURCES
FORESTRY · PLANNING · LANDSCAPE ARCHITECTURE

MANDEL FARMS SUBDIVISION

SHERWOOD OREGON
TAX LOTS 250 AND 251 WASHINGTON COUNTY TAX MAP 2S 1 30CB

PRELIMINARY GRADING AND EROSION AND SEDIMENT CONTROL PLAN

DESIGNED BY:	PAS/DS
DRAWN BY:	DS
CHECKED BY:	PAS
SCALE:	AS NOTED

DATE: 01-08-2016

REGISTERED PROFESSIONAL ENGINEER
OREGON
JULY 11, 2001
PAMELA A. SELLKE
RENEWAL DATE: 6/30/16

PRELIMINARY NOT FOR CONSTRUCTION

REVISIONS

JOB NUMBER
4570

SHEET
P10

AKS DRAWING FILE: P08 GRADING.DWG | LAYOUT: P10

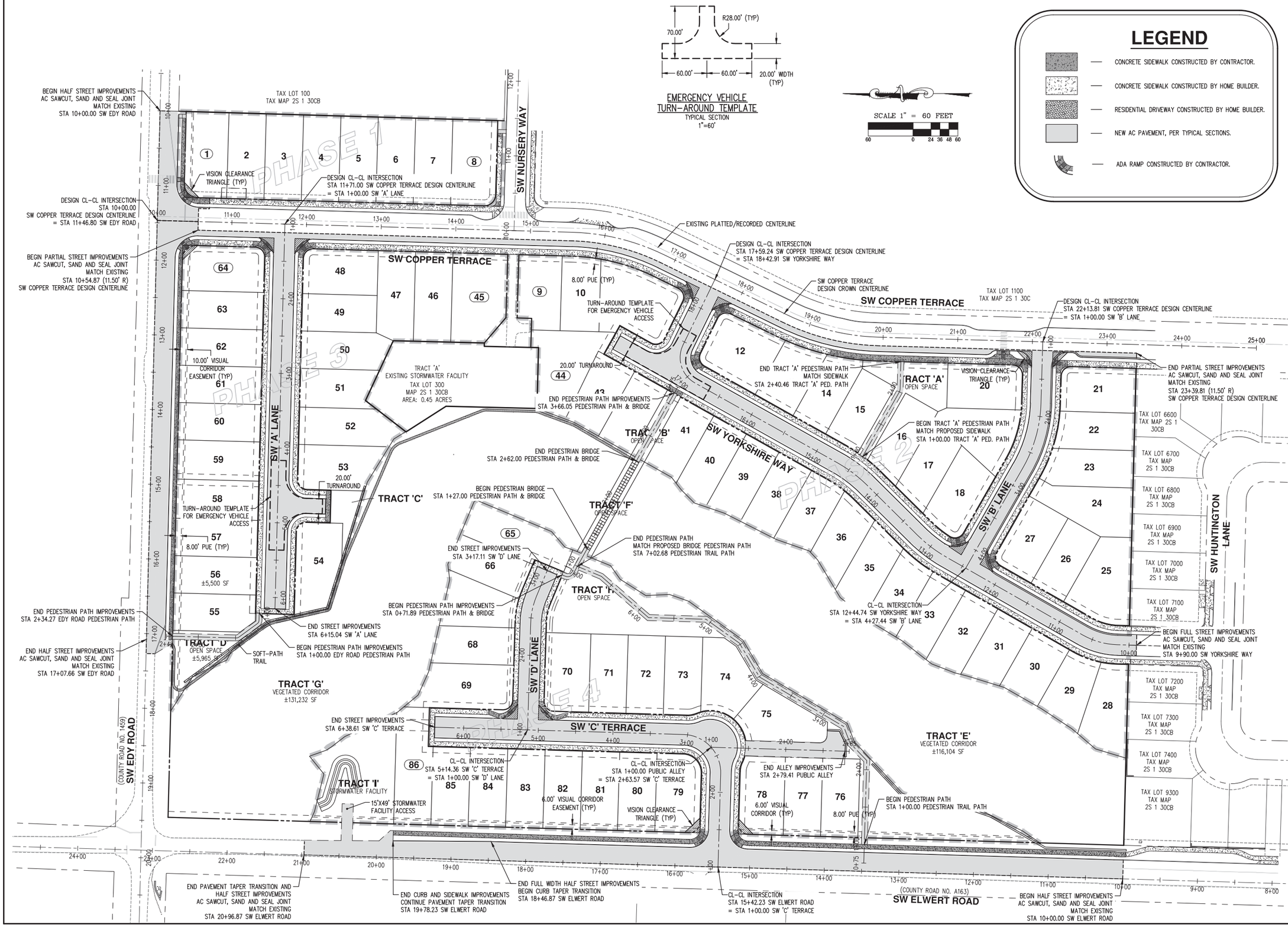

AKS ENGINEERING & FORESTRY, LLC
12965 SW HERMAN RD STE 100
TUALATIN, OR 97062
P: 503.563.6151
F: 503.563.6152
aks-eng.com

ENGINEERING - SURVEYING - NATURAL RESOURCES
FORESTRY - PLANNING - LANDSCAPE ARCHITECTURE

MANDEL FARMS SUBDIVISION

OREGON
WASHINGTON COUNTY TAX MAP 2S 1 30CB
SHERWOOD
TAX LOTS 250 AND 251

PRELIMINARY STREET PLAN

DESIGNED BY:	PAS/DS
DRAWN BY:	DS
CHECKED BY:	PAS
SCALE:	AS NOTED

DATE: 01-08-2016

REGISTERED PROFESSIONAL ENGINEER
OREGON
JANUARY 15, 2011
PATRICK A. SELLKE
PRELIMINARY NOT FOR CONSTRUCTION
RENEWAL DATE: 6/30/16

REVISIONS

JOB NUMBER
4570

SHEET
P11

AKS DRAWING FILE: P09 STREET.DWG | LAYOUT: P09

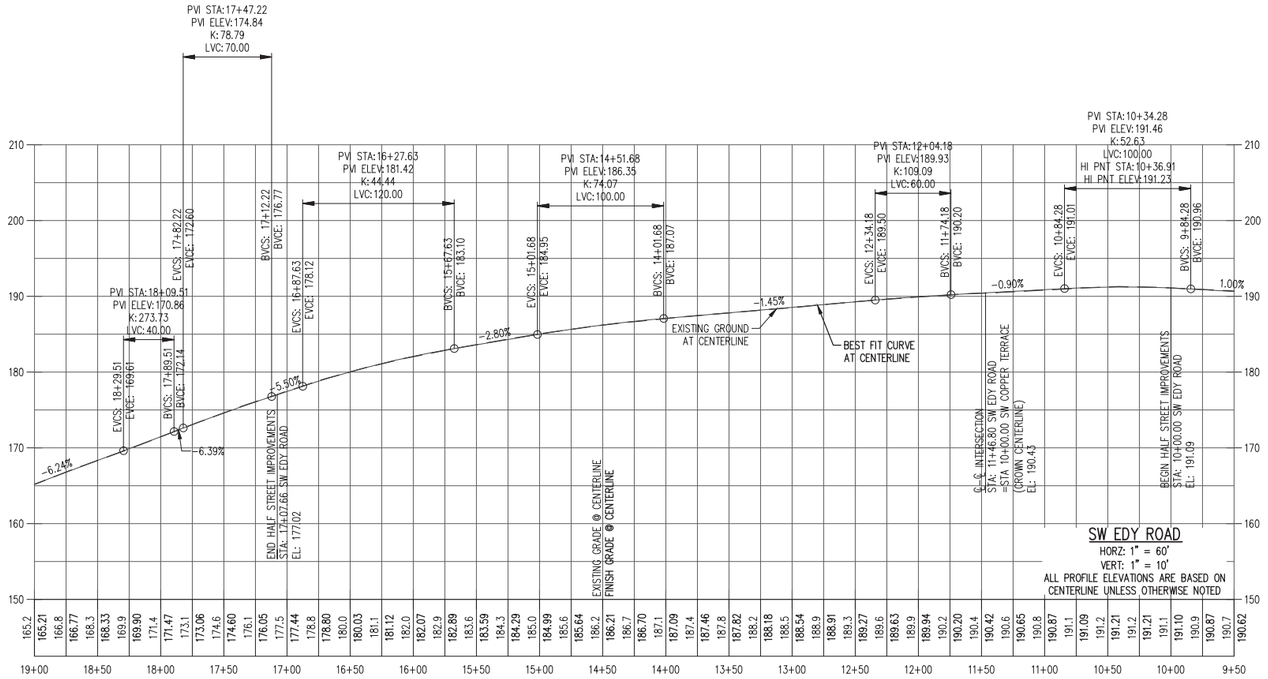

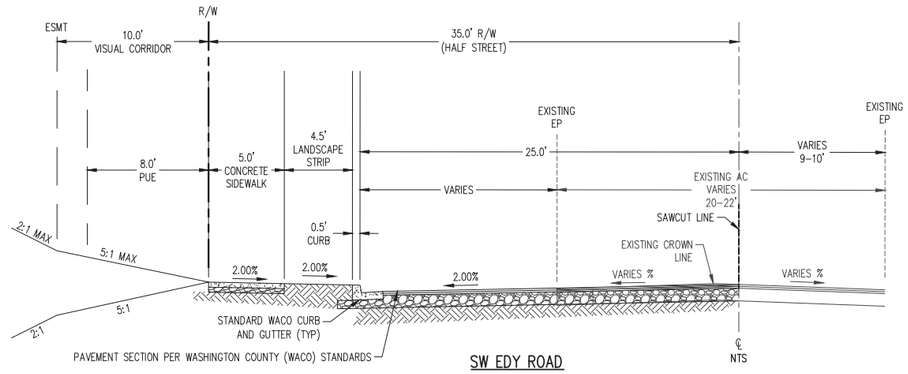

SHOWN DESIGN PROFILES FOR BOTH SW EDY ROAD AND SW ELWERT ROAD ARE INTENDED TO MATCH EXISTING CONDITIONS IN THE FIELD. THESE PROFILES ARE NOT DESIGNED PER CURRENT CITY OR COUNTY VERTICAL CURVE STANDARDS.

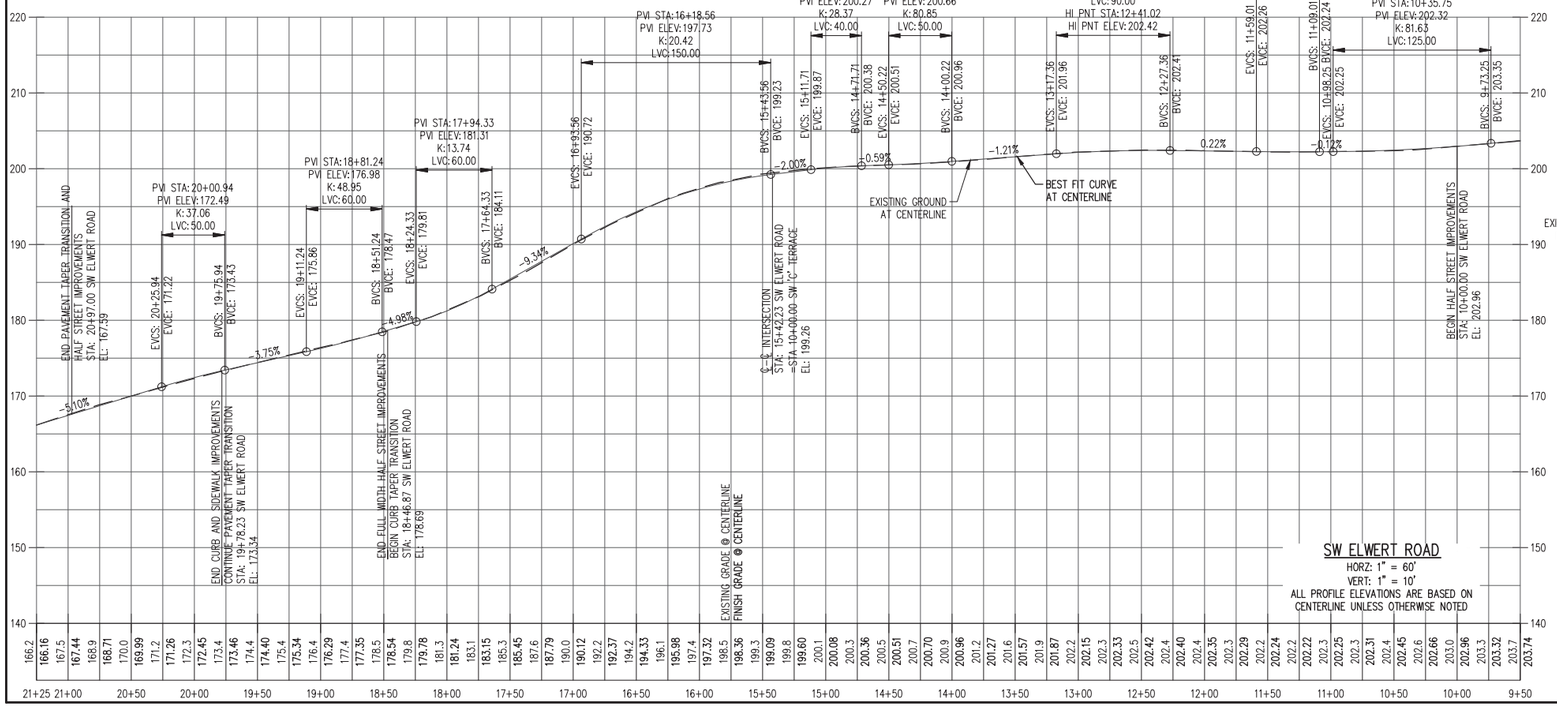

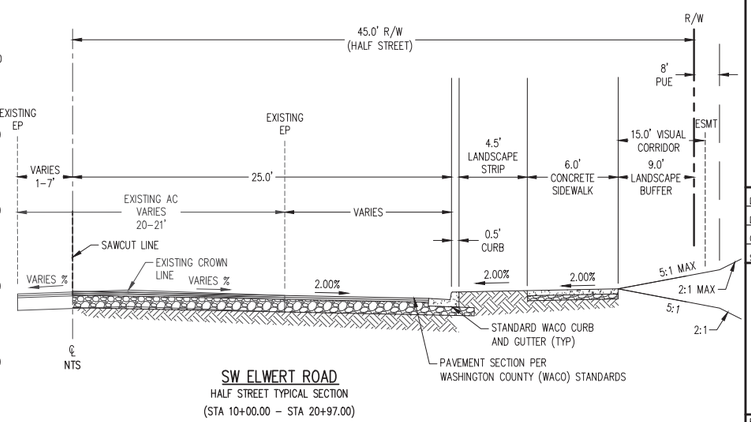

AKS ENGINEERING & FORESTRY, LLC
12965 SW HERMAN RD STE 100
TUALATIN, OR 97062
P: 503.563.6151
F: 503.563.6152
aks-eng.com

AKS ENGINEERING - SURVEYING - NATURAL RESOURCES
FORESTRY - PLANNING - LANDSCAPE ARCHITECTURE

MANDEL FARMS SUBDIVISION

SHERWOOD OREGON
TAX LOTS 250 AND 251
WASHINGTON COUNTY TAX MAP 2S 1 30DB

PRELIMINARY STREET PROFILES AND CROSS-SECTIONS

DESIGNED BY:	PAS/DS
DRAWN BY:	DS
CHECKED BY:	PAS
SCALE:	AS NOTED
DATE:	01-08-2016

REGISTERED PROFESSIONAL ENGINEER
OREGON
JULY 13, 2005
PAUL A. SELLKE
RENEWAL DATE: 6/30/16

PRELIMINARY NOT FOR CONSTRUCTION

REVISIONS

JOB NUMBER
4570

SHEET
P12

AKS DRAWING FILE: P09 STREET.DWG | LAYOUT: P10

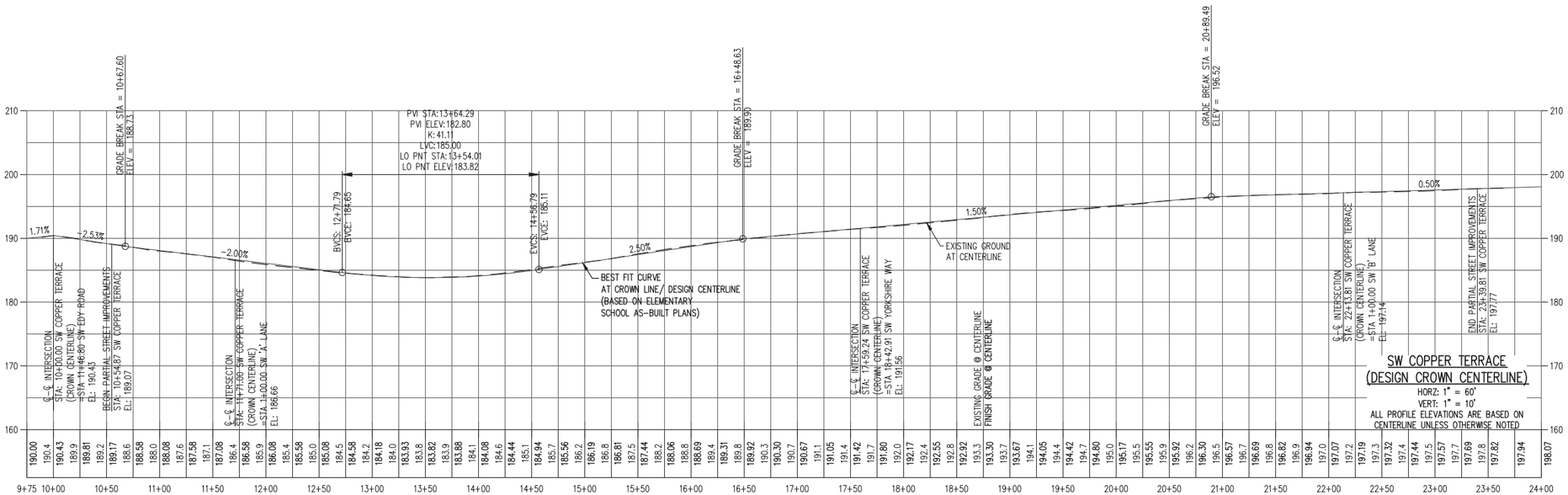

SHOWN DESIGN PROFILE FOR SW COPPER TERRACE IS INTENDED TO MATCH EXISTING CONDITIONS IN THE FIELD. THIS PROFILE IS NOT DESIGNED PER CURRENT CITY VERTICAL CURVE STANDARDS.

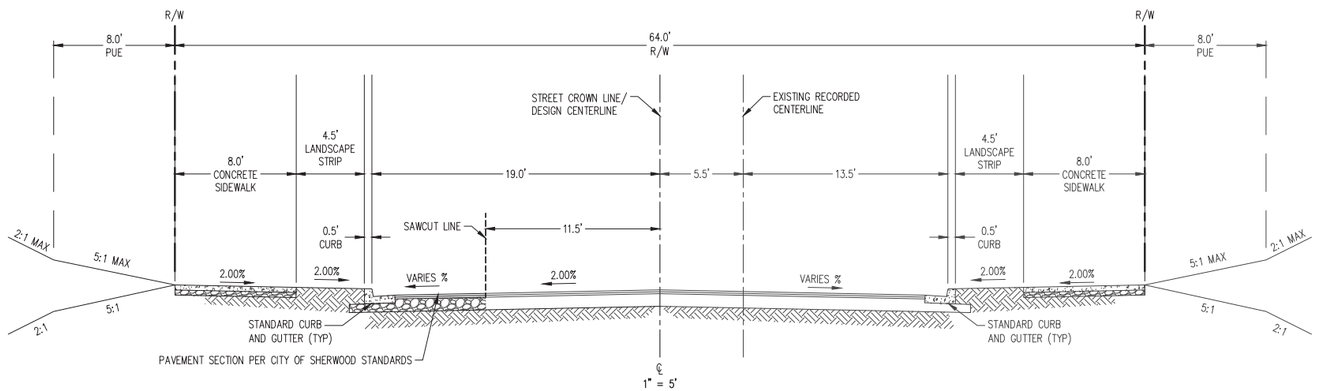

SW COPPER TERRACE
TYPICAL SECTION
(STA 10+54.88 – STA 23+41.82)

AKS ENGINEERING & FORESTRY, LLC
12965 SW HERMAN RD STE 100
TUALATIN, OR 97062
P: 503.563.6151
F: 503.563.6152
aks-eng.com

ENGINEERING · SURVEYING · NATURAL RESOURCES
FORESTRY · PLANNING · LANDSCAPE ARCHITECTURE

MANDEL FARMS SUBDIVISION

SHERWOOD OREGON
TAX LOTS 250 AND 251
WASHINGTON COUNTY TAX MAP 2S 1 30CB

PRELIMINARY STREET PROFILES AND CROSS-SECTIONS (CONT.)

DESIGNED BY:	PAS/DS
DRAWN BY:	DS
CHECKED BY:	PAS
SCALE:	AS NOTED

DATE: 01-08-2016

REGISTERED PROFESSIONAL ENGINEER
PRELIMINARY NOT FOR CONSTRUCTION
OREGON
JULY 9, 2001
PAUL A. SELLKE
RENEWAL DATE: 6/30/16

REVISIONS

JOB NUMBER
4570

SHEET
P13

AKS DRAWING FILE: P09 STREET.DWG | LAYOUT: P11

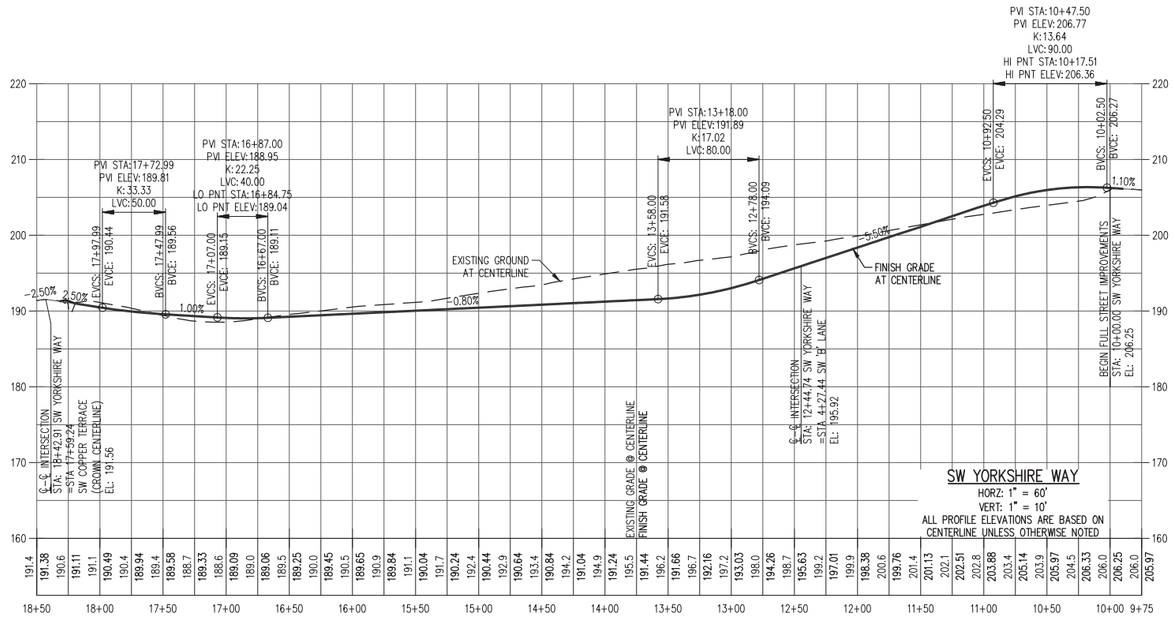

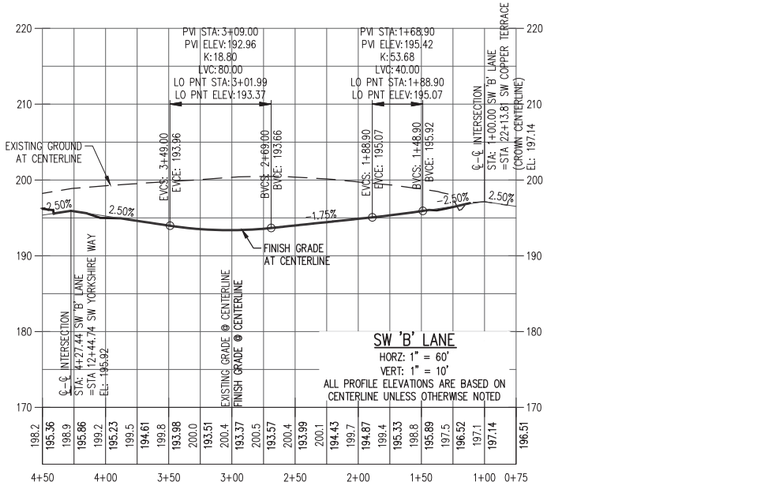

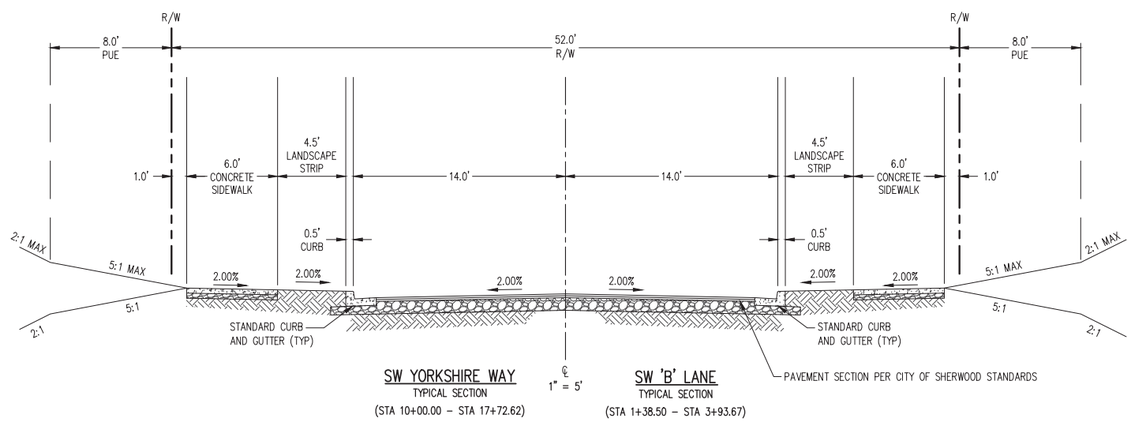

SW YORKSHIRE WAY
TYPICAL SECTION
(STA 10+00.00 – STA 17+72.62)

SW 'B' LANE
TYPICAL SECTION
(STA 1+38.50 – STA 3+93.67)

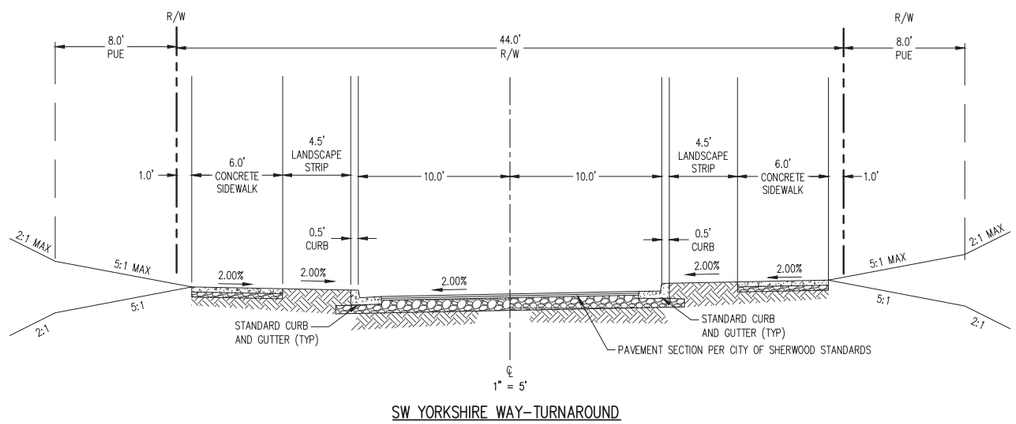

SW YORKSHIRE WAY–TURNAROUND
TYPICAL SECTION

AKS ENGINEERING & FORESTRY, LLC
12965 SW HERMAN RD STE 100
TUALATIN, OR 97062
P: 503.563.6151
F: 503.563.6152
aks-eng.com

AKS
ENGINEERING - SURVEYING - NATURAL RESOURCES
FORESTRY - PLANNING - LANDSCAPE ARCHITECTURE

MANDEL FARMS SUBDIVISION

SHERWOOD OREGON
TAX LOTS 250 AND 251
WASHINGTON COUNTY TAX MAP 2S 1 30DB

PRELIMINARY STREET PROFILES AND CROSS-SECTIONS (CONT.)

DESIGNED BY:	PAS/DS
DRAWN BY:	DS
CHECKED BY:	PAS
SCALE:	AS NOTED

DATE: 01-08-2016

REGISTERED PROFESSIONAL ENGINEER
OREGON
JULY 13, 2001
PHILIP A. SELLKE
RENEWAL DATE: 6/30/16

REVISIONS

JOB NUMBER
4570

SHEET
P14

AKS DRAWING FILE: P09 STREET.DWG | LAYOUT: P12

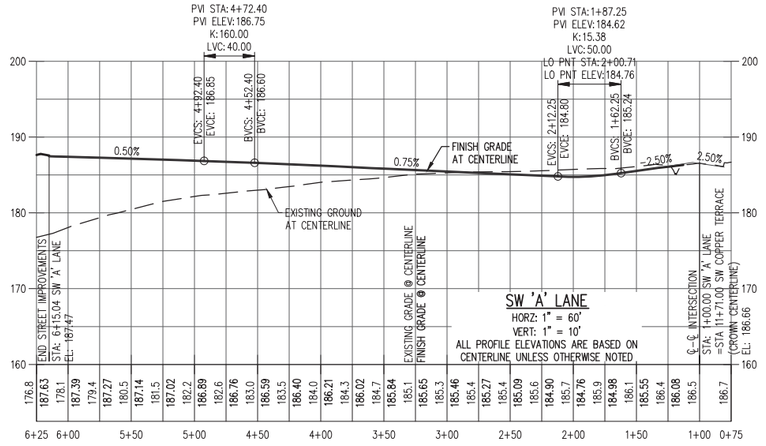

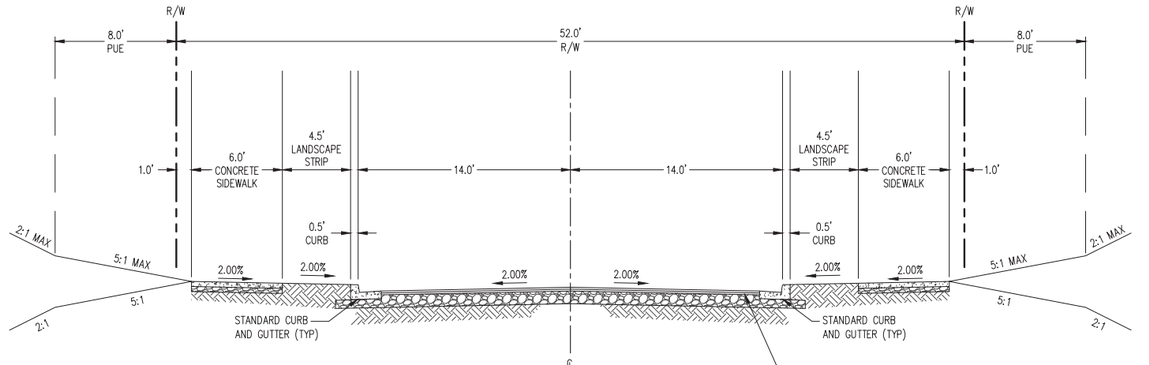

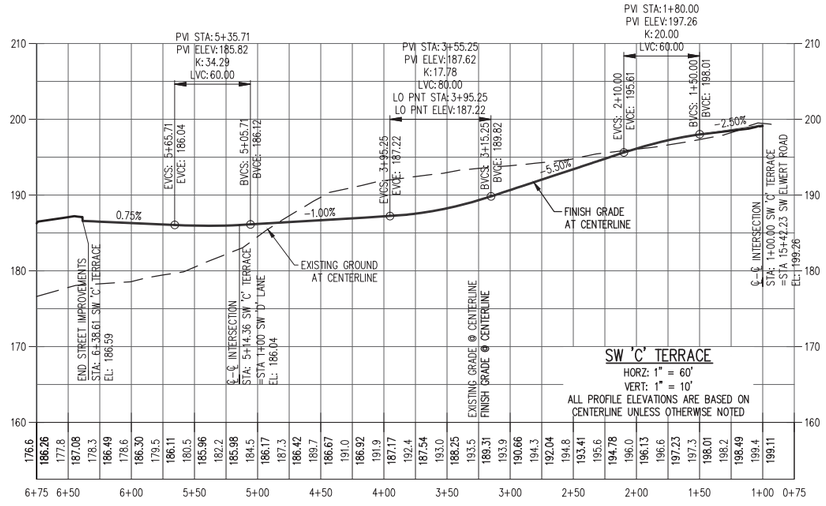

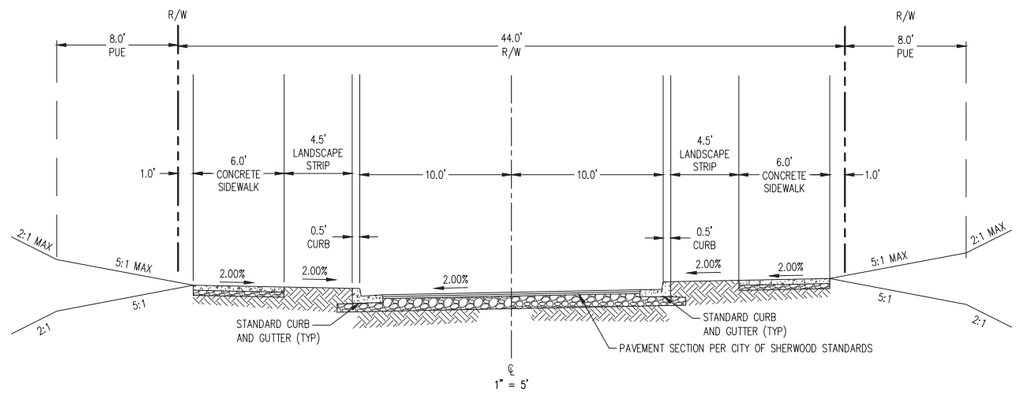

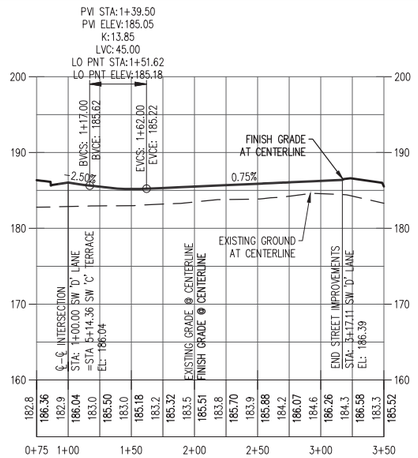

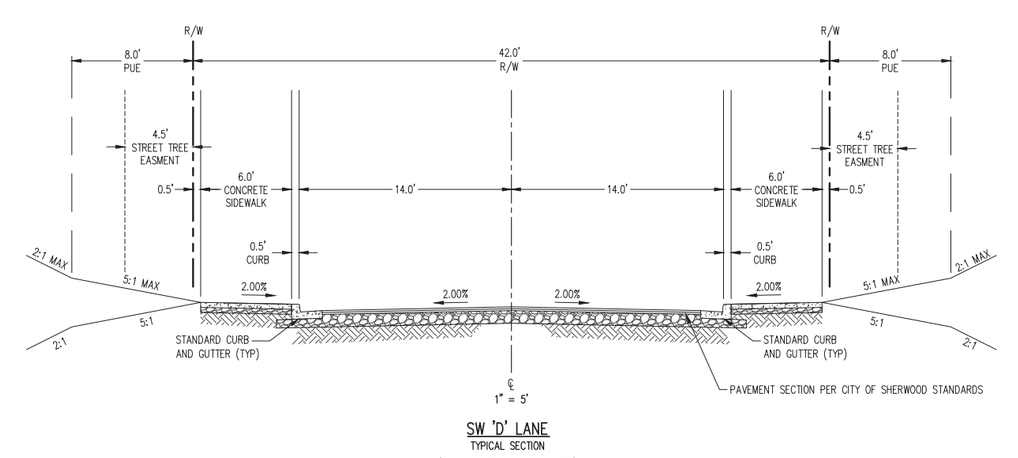

AKS ENGINEERING & FORESTRY, LLC
12965 SW HERMAN RD STE 100
TUALATIN, OR 97062
P: 503.563.6151
F: 503.563.6152
aks-eng.com

ENGINEERING · SURVEYING · NATURAL RESOURCES
FORESTRY · PLANNING · LANDSCAPE ARCHITECTURE

MANDEL FARMS SUBDIVISION

SHERWOOD OREGON
TAX LOTS 250 AND 251 WASHINGTON COUNTY TAX MAP 2S 1 30DB

PRELIMINARY STREET PROFILES AND CROSS-SECTIONS (CONT.)

DESIGNED BY:	PAS/DS
DRAWN BY:	DS
CHECKED BY:	PAS
SCALE:	AS NOTED

DATE: 01-08-2016

REGISTERED PROFESSIONAL ENGINEER — OREGON — JULY 13, 2001 — PAMELA A. SELKE — RENEWAL DATE: 6/30/16

PRELIMINARY NOT FOR CONSTRUCTION

REVISIONS

JOB NUMBER
4570

SHEET
P15

AKS DRAWING FILE: P09 STREETLDWG | LAYOUT: P13

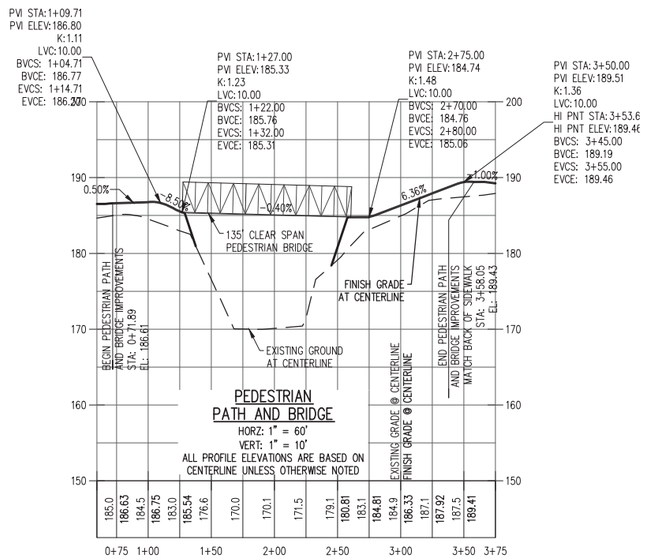

PEDESTRIAN PATH AND BRIDGE

HORZ: 1" = 60'
VERT: 1" = 10'
ALL PROFILE ELEVATIONS ARE BASED ON CENTERLINE UNLESS OTHERWISE NOTED

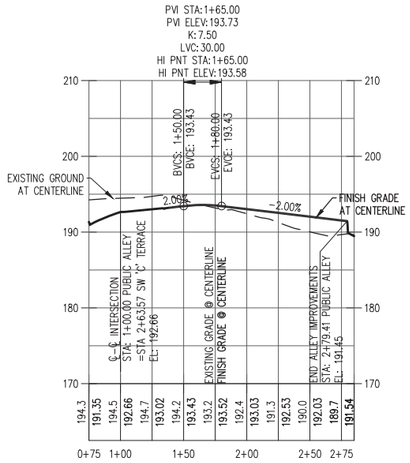

PUBLIC ALLEY

HORZ: 1" = 60'
VERT: 1" = 10'
ALL PROFILE ELEVATIONS ARE BASED ON CENTERLINE UNLESS OTHERWISE NOTED

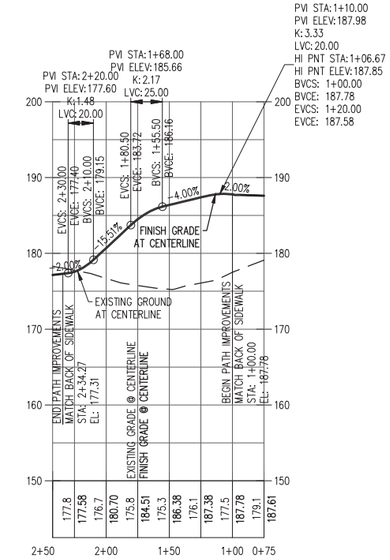

EDY ROAD PEDESTRIAN PATH

HORZ: 1" = 60'
VERT: 1" = 10'
ALL PROFILE ELEVATIONS ARE BASED ON CENTERLINE UNLESS OTHERWISE NOTED

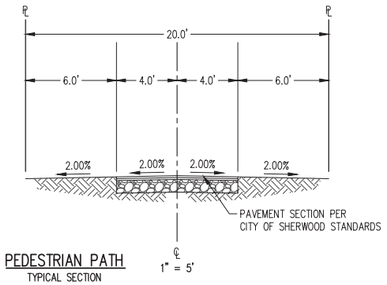

PEDESTRIAN PATH

TYPICAL SECTION
(STA 1+06.00 – STA 4+63.90)

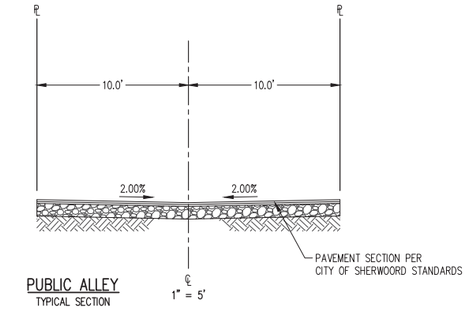

PUBLIC ALLEY

TYPICAL SECTION
(STA 1+47.00 – STA 2+72.91)

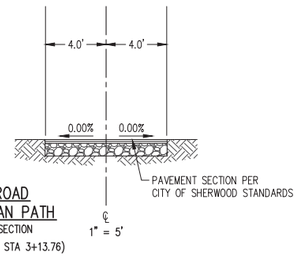

EDY ROAD PEDESTRIAN PATH

TYPICAL SECTION
(STA 1+00.00 – STA 3+13.76)

AKS ENGINEERING & FORESTRY, LLC
12965 SW HERMAN RD STE 100
TUALATIN, OR 97062
P: 503.563.6151
F: 503.563.6152
aks-eng.com

AKS
ENGINEERING - SURVEYING - NATURAL RESOURCES
FORESTRY - PLANNING - LANDSCAPE ARCHITECTURE

MANDEL FARMS SUBDIVISION

SHERWOOD OREGON

TAX LOTS 250 AND 251
WASHINGTON COUNTY TAX MAP 2S 1 30DB

PRELIMINARY STREET PROFILES AND CROSS-SECTIONS (CONT.)

DESIGNED BY:	PAS/DS
DRAWN BY:	DS
CHECKED BY:	PAS
SCALE:	AS NOTED
DATE:	01-08-2016

REGISTERED PROFESSIONAL ENGINEER
OREGON
JULY 14, 2001
PAMELA A. SELLKE
PRELIMINARY NOT FOR CONSTRUCTION
RENEWAL DATE: 6/30/16

REVISIONS

JOB NUMBER
4570

SHEET
P16

AKS DRAWING FILE: P09 STREET.DWG | LAYOUT: P14

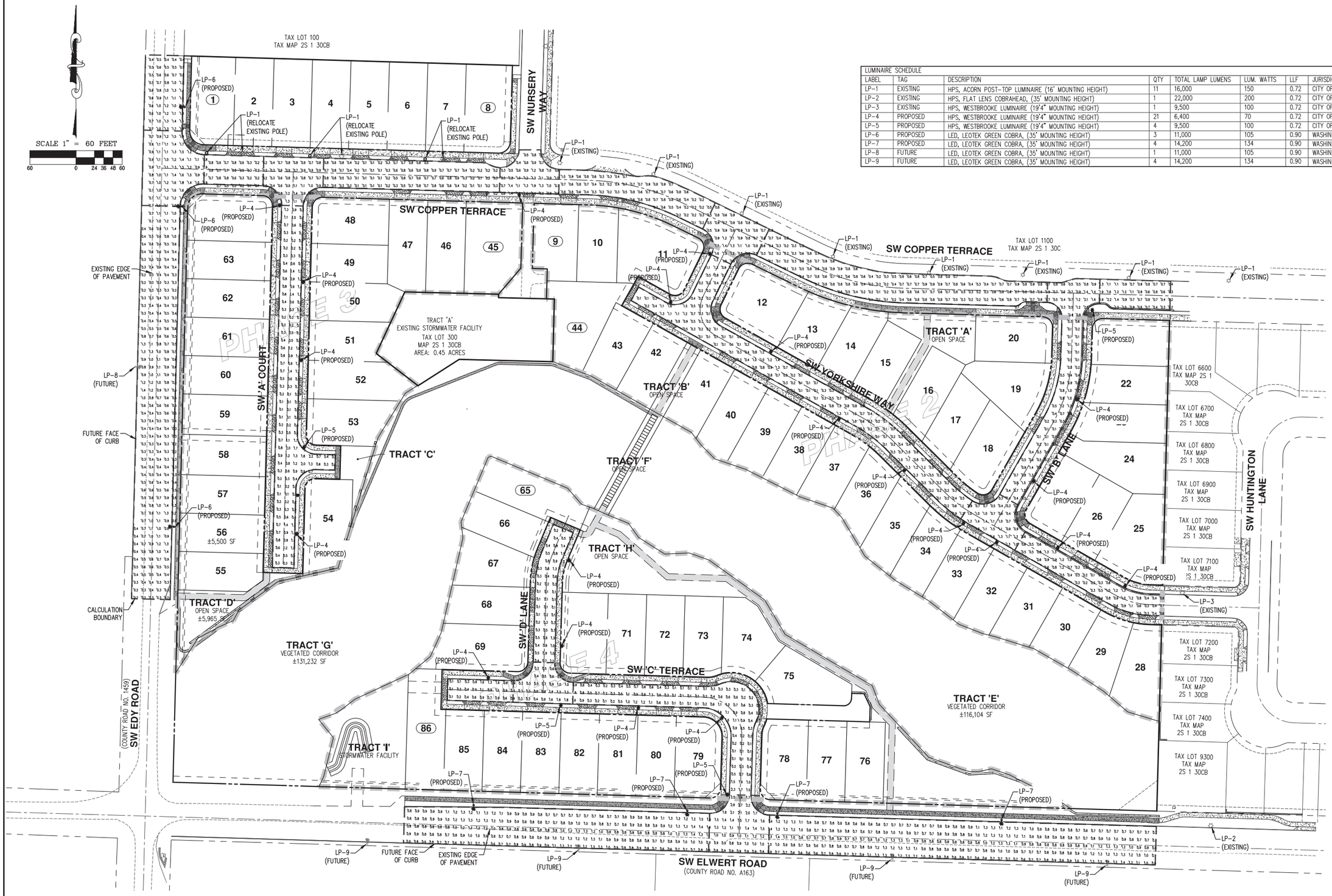

LUMINAIRE SCHEDULE							
LABEL	TAG	DESCRIPTION	QTY	TOTAL LAMP LUMENS	LUM. WATTS	LLF	JURISDICTION
LP-1	EXISTING	HPS, ACORN POST-TOP LUMINAIRE (16' MOUNTING HEIGHT)	11	16,000	150	0.72	CITY OF SHERWOOD
LP-2	EXISTING	HPS, FLAT LENS COBRAHEAD, (35' MOUNTING HEIGHT)	1	22,000	200	0.72	CITY OF SHERWOOD
LP-3	EXISTING	HPS, WESTBROOKE LUMINAIRE (19'4" MOUNTING HEIGHT)	1	9,500	100	0.72	CITY OF SHERWOOD
LP-4	PROPOSED	HPS, WESTBROOKE LUMINAIRE (19'4" MOUNTING HEIGHT)	21	6,400	70	0.72	CITY OF SHERWOOD
LP-5	PROPOSED	HPS, WESTBROOKE LUMINAIRE (19'4" MOUNTING HEIGHT)	4	9,500	100	0.72	CITY OF SHERWOOD
LP-6	PROPOSED	LED, LEOTEK GREEN COBRA, (35' MOUNTING HEIGHT)	3	11,000	105	0.90	WASHINGTON COUNTY
LP-7	PROPOSED	LED, LEOTEK GREEN COBRA, (35' MOUNTING HEIGHT)	4	14,200	134	0.90	WASHINGTON COUNTY
LP-8	FUTURE	LED, LEOTEK GREEN COBRA, (35' MOUNTING HEIGHT)	1	11,000	105	0.90	WASHINGTON COUNTY
LP-9	FUTURE	LED, LEOTEK GREEN COBRA, (35' MOUNTING HEIGHT)	4	14,200	134	0.90	WASHINGTON COUNTY

AKS ENGINEERING & FORESTRY, LLC
12965 SW HERMAN RD STE 100
TUALATIN, OR 97062
P: 503.563.6151
F: 503.563.6152
aks-eng.com
ENGINEERING · SURVEYING · NATURAL RESOURCES
FORESTRY · PLANNING · LANDSCAPE ARCHITECTURE

MANDEL FARMS SUBDIVISION

SHERWOOD OREGON
TAX LOTS 250 AND 251
WASHINGTON COUNTY TAX MAP 2S 1 30CB

PRELIMINARY PHOTOMETRIC PLAN

DESIGNED BY: PAS/DS
DRAWN BY: DS
CHECKED BY: PAS
SCALE: AS NOTED
DATE: 01-08-2016

REGISTERED PROFESSIONAL ENGINEER
PRELIMINARY NOT FOR CONSTRUCTION
JOHN P. CHRISTIANSEN
RENEWAL DATE: 12/31/17

REVISIONS

JOB NUMBER
4570

SHEET
P17

AKS DRAWING FILE: P20 LIGHTING.DWG | LAYOUT: P15

CALCULATION SUMMARY (CITY OF SHERWOOD)								
LABEL	CLASSIFICATION	CALCTYPE	UNITS	AVG	MAX	MIN	AVG/MIN	MAX/MIN
SW COPPER TERRACE	NEIGHBORHOOD ROUTE	Illuminance	Fc	0.6	2.2	0.1	6	22
SW YORKSHIRE WAY	LOCAL	Illuminance	Fc	0.6	1.6	0.1	6	16
SW 'A' LANE	LOCAL	Illuminance	Fc	0.6	2.2	0.1	6	22
SW 'B' LANE	LOCAL	Illuminance	Fc	0.5	1.4	0.1	5	14
SW 'C' TERRACE	LOCAL	Illuminance	Fc	0.6	2.3	0.1	6	23
SW 'D' LANE	LOCAL	Illuminance	Fc	0.5	1.4	0.1	5	14
SW COPPER TERRACE – SW 'A' COURT	NEIGHBORHOOD ROUTE/LOCAL INTERSECTION	Illuminance	Fc	0.8	1.4	0.3	3	5
SW COPPER TERRACE – SW NURSERY WAY	NEIGHBORHOOD ROUTE/LOCAL INTERSECTION	Illuminance	Fc	1.0	1.9	0.3	3	6
SW COPPER TERRACE – SW YORKSHIRE WAY	NEIGHBORHOOD ROUTE/LOCAL INTERSECTION	Illuminance	Fc	0.9	1.7	0.5	2	3
SW COPPER TERRACE – SW 'B' LANE	NEIGHBORHOOD ROUTE/LOCAL INTERSECTION	Illuminance	Fc	1.0	2.1	0.3	3	7
SW YORKSHIRE WAY – SW 'B' LANE	LOCAL/LOCAL INTERSECTION	Illuminance	Fc	0.9	1.6	0.3	3	5
SW 'C' TERRACE – SW 'D' LANE	LOCAL/LOCAL INTERSECTION	Illuminance	Fc	0.8	1.9	0.3	3	6

LIGHT LEVEL SUMMARY (CITY OF SHERWOOD)				
ROADWAY	CLASSIFICATION (PEDESTRIAN CONFLICT)		LIGHT LEVEL	UNIFORMITY
SW COPPER TERRACE	NEIGHBORHOOD ROUTE (LOW)	TARGET	≥ 0.4 FC AVE	≤ 6:1 AVE/MIN
		ACHIEVED	0.6 FC	6:1
SW YORKSHIRE WAY	LOCAL (LOW)	TARGET	≥ 0.4 FC AVE	≤ 6:1 AVE/MIN
		ACHIEVED	0.6 FC	6:1
SW 'A' COURT	LOCAL (LOW)	TARGET	≥ 0.4 FC AVE	≤ 6:1 AVE/MIN
		ACHIEVED	0.6 FC	6:1
SW 'B' LANE	LOCAL (LOW)	TARGET	≥ 0.4 FC AVE	≤ 6:1 AVE/MIN
		ACHIEVED	0.5 FC	5:1
SW 'C' TERRACE	LOCAL (LOW)	TARGET	≥ 0.4 FC AVE	≤ 6:1 AVE/MIN
		ACHIEVED	0.6 FC	6:1
SW 'D' LANE	LOCAL (LOW)	TARGET	≥ 0.4 FC AVE	≤ 6:1 AVE/MIN
		ACHIEVED	0.5 FC	5:1
SW COPPER TERRACE – SW 'A' LANE	NEIGHBORHOOD ROUTE/LOCAL INTERSECTION (LOW)	TARGET	≥ 0.8 FC AVE	≤ 4:1 AVE/MIN
		ACHIEVED	0.8 FC	3:1
SW COPPER TERRACE – SW NURSERY WAY	NEIGHBORHOOD ROUTE/LOCAL INTERSECTION (LOW)	TARGET	≥ 0.8 FC AVE	≤ 4:1 AVE/MIN
		ACHIEVED	1.0 FC	3:1
SW COPPER TERRACE – SW YORKSHIRE WAY	NEIGHBORHOOD ROUTE/LOCAL INTERSECTION (LOW)	TARGET	≥ 0.8 FC AVE	≤ 4:1 AVE/MIN
		ACHIEVED	0.9 FC	2:1
SW COPPER TERRACE – SW 'B' LANE	NEIGHBORHOOD ROUTE/LOCAL INTERSECTION (LOW)	TARGET	≥ 0.8 FC AVE	≤ 4:1 AVE/MIN
		ACHIEVED	1.0 FC	3:1
SW YORKSHIRE WAY – SW 'B' LANE	LOCAL/LOCAL INTERSECTION (LOW)	TARGET	≥ 0.8 FC AVE	≤ 4:1 AVE/MIN
		ACHIEVED	0.9 FC	3:1
SW 'C' TERRACE – SW 'D' LANE	LOCAL/LOCAL INTERSECTION (LOW)	TARGET	≥ 0.8 FC AVE	≤ 4:1 AVE/MIN
		ACHIEVED	0.8 FC	3:1

NOTE:
TARGET = CODE REQUIRED PER WASHINGTON COUNTY STANDARDS FOR ROADWAY ILLUMINATION
ACHIEVED = DESIGN VALUE

CALCULATION SUMMARY (WASHINGTON COUNTY)								
LABEL	CLASSIFICATION	CALCTYPE	UNITS	AVG	MAX	MIN	AVG/MIN	MAX/MIN
SW EDY ROAD	COLLECTOR	Illuminance	Fc	0.6	1.9	0.2	3	10
SW ELWERT ROAD	ARTERIAL	Illuminance	Fc	0.9	1.5	0.6	2	3
SW EDY ROAD – SW COPPER TERRACE	COLLECTOR/NEIGHBORHOOD ROUTE INTERSECTION	Illuminance	Fc	1.1	1.9	0.7	2	3
SW ELWERT ROAD – SW 'C' TERRACE	ARTERIAL/LOCAL INTERSECTION	Illuminance	Fc	1.4	2.9	0.8	2	4

LIGHT LEVEL SUMMARY (WASHINGTON COUNTY)				
ROADWAY	CLASSIFICATION (PEDESTRIAN CONFLICT)		LIGHT LEVEL	UNIFORMITY
SW EDY ROAD	COLLECTOR (LOW)	TARGET	≥ 0.6 FC AVE	≤ 4:1 AVE/MIN
		ACHIEVED	0.6 FC	3:1
SW ELWERT ROAD	ARTERIAL (LOW)	TARGET	≥ 0.9 FC AVE	≤ 3:1 AVE/MIN
		ACHIEVED	0.9 FC	2:1
SW COPPER TERRACE – SW EDY ROAD	COLLECTOR/NEIGHBORHOOD ROUTE INTERSECTION (LOW)	TARGET	≥ 1.0 FC AVE	≤ 4:1 AVE/MIN
		ACHIEVED	1.1 FC	2:1
SW ELWERT ROAD – SW 'C' TERRACE	ARTERIAL/LOCAL INTERSECTION (LOW)	TARGET	≥ 1.3 FC AVE	≤ 3:1 AVE/MIN
		ACHIEVED	1.4 FC	2:1

NOTE:
TARGET = CODE REQUIRED PER WASHINGTON COUNTY STANDARDS FOR ROADWAY ILLUMINATION
ACHIEVED = DESIGN VALUE

AKS ENGINEERING & FORESTRY, LLC
12965 SW HERMAN RD STE 100
TUALATIN, OR 97062
P: 503.563.6151
F: 503.563.6152
aks-eng.com

ENGINEERING · SURVEYING · NATURAL RESOURCES
FORESTRY · PLANNING · LANDSCAPE ARCHITECTURE

MANDEL FARMS SUBDIVISION

SHERWOOD OREGON
TAX LOTS 250 AND 251 WASHINGTON COUNTY TAX MAP 2S 1 30DB

PRELIMINARY PHOTOMETRIC CALCULATION SUMMARY

DESIGNED BY: PAS/DS
DRAWN BY: DS
CHECKED BY: PAS
SCALE: AS NOTED
DATE: 01-08-2016

REGISTERED PROFESSIONAL ENGINEER
OREGON
JULY 13, 2005
JOHN P. CHRISTIANSEN
PRELIMINARY NOT FOR CONSTRUCTION
RENEWAL DATE: 12/31/17

REVISIONS

JOB NUMBER
4570

SHEET
P18

AKS DRAWING FILE: P20 LIGHTING.DWG | LAYOUT: P16

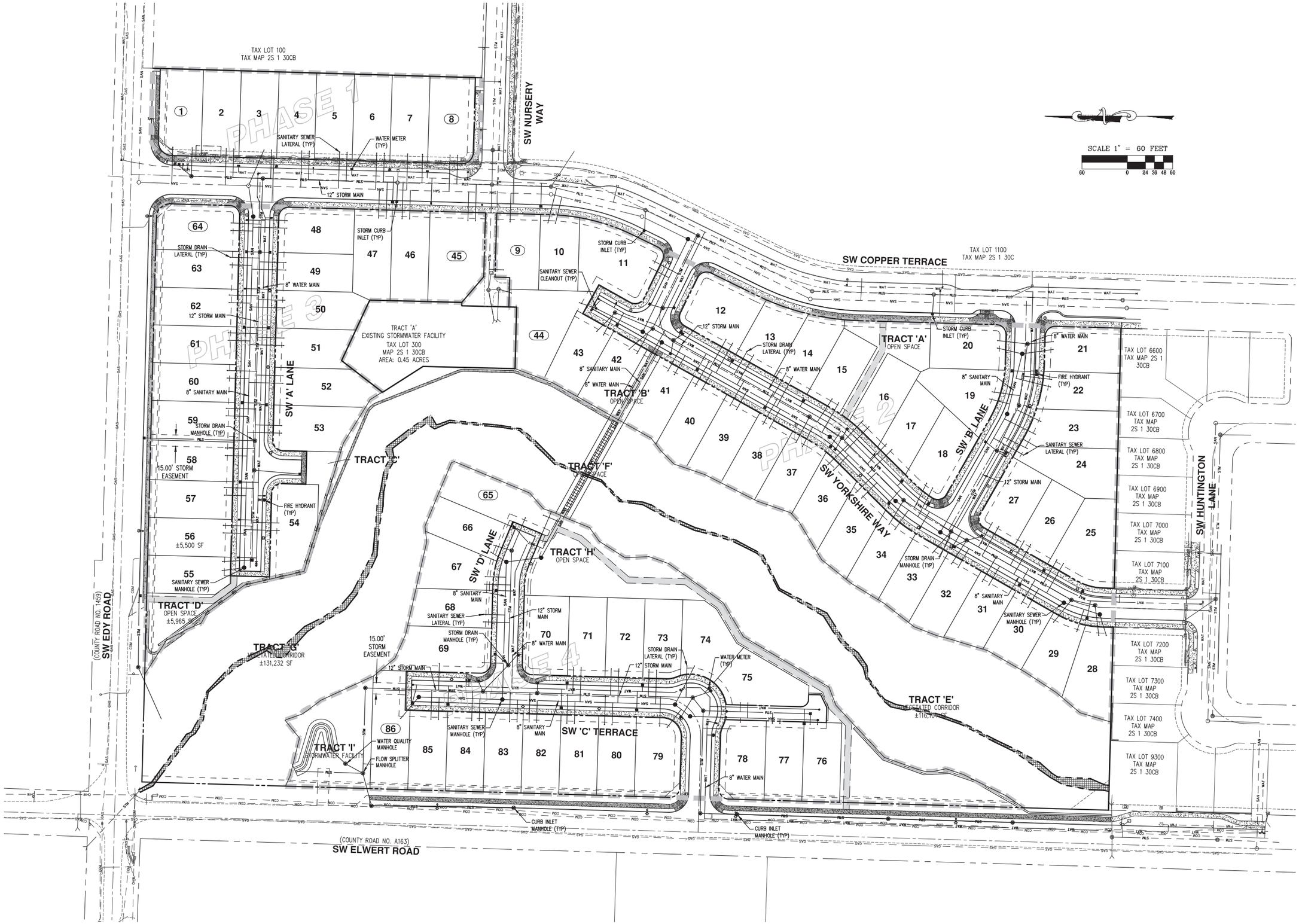

AKS ENGINEERING & FORESTRY, LLC
12965 SW HERMAN RD STE 100
TUALATIN, OR 97062
P: 503.563.6151
F: 503.563.6152
aks-eng.com

ENGINEERING · SURVEYING · NATURAL RESOURCES
FORESTRY · PLANNING · LANDSCAPE ARCHITECTURE

MANDEL FARMS SUBDIVISION

SHERWOOD OREGON
TAX LOTS 250 AND 251
WASHINGTON COUNTY TAX MAP 2S 1 30CB

PRELIMINARY COMPOSITE UTILITY PLAN

DESIGNED BY:	PAS/DS
DRAWN BY:	DS
CHECKED BY:	PAS
SCALE:	AS NOTED

DATE: 01-08-2016

REGISTERED PROFESSIONAL ENGINEER
PRELIMINARY NOT FOR CONSTRUCTION
OREGON
JULY 19, 2001
PAUL A. SELLKE
RENEWAL DATE: 6/30/16

REVISIONS

JOB NUMBER
4570

SHEET
P19

AKS DRAWING FILE: P13 COMP UTL.DWG | LAYOUT: 18

AKS DRAWING FILE: P19 CIRC.DWG | LAYOUT: P19

CONCEPTUAL FUTURE CONNECTIVITY PLAN

MANDEL FARMS SUBDIVISION

SHERWOOD OREGON

TAX LOTS 250 AND 251 WASHINGTON COUNTY TAX MAP 2S 1 30CB

AKS ENGINEERING & FORESTRY, LLC
12965 SW HERMAN RD STE 100
TUALATIN, OR 97062
P: 503.563.6151
F: 503.563.6152
aks-eng.com

ENGINEERING • SURVEYING • NATURAL RESOURCES
FORESTRY • PLANNING • LANDSCAPE ARCHITECTURE

DESIGNED BY: PAS/DS
DRAWN BY: DS
CHECKED BY: PAS
SCALE: AS NOTED
DATE: 01-08-2016

REGISTERED PROFESSIONAL ENGINEER
PRELIMINARY NOT FOR CONSTRUCTION
PAUL SCLUE
RENEWAL DATE: 6/30/16

REVISIONS

JOB NUMBER 4570

SHEET P20

PLANT SCHEDULE

OPEN SPACE TREES	QTY	BOTANICAL NAME	COMMON NAME	SIZE/CONTAINER	SPACING
⊙	29	ACER CIRCINATUM	VINE MAPLE	6'–7' HT. B&B	AS SHOWN
⊙	14	ACER RUBRUM 'OCTOBER GLORY'	OCTOBER GLORY MAPLE	2" CAL. B&B	AS SHOWN
✺	17	THUJA PLICATA	WESTERN RED CEDAR	8'–10' HT. B&B	AS SHOWN
STREET TREES	**QTY**	**BOTANICAL NAME**	**COMMON NAME**	**SIZE/CONTAINER**	**SPACING**
⊕	68	ACER RUBRUM 'FRANKSRED'	RED SUNSET MAPLE	2" CAL. B&B	AS SHOWN
⊗	68	FRAXINUS OXYCARPA 'RAYWOOD'	RAYWOOD ASH	2" CAL. B&B	AS SHOWN
⊙	73	QUERCUS ROBUR X ALBA 'CRIMSON SPIRE'	CRIMSON SPIRE OAK	2" CAL. B&B	AS SHOWN
⊙	52	TILIA CORDATA 'CHANCOLE'	CHANCELLOR LINDEN	2" CAL. B&B	AS SHOWN
SHRUBS/GROUNDCOVER					
▩		SHRUB AREA			
▨		GROUNDCOVER PLANTS			
⁘		LAWN			

GENERAL NOTES:

1. PLAN IS PRELIMINARY AND INTENDED TO SHOW THAT APPLICABLE STANDARDS OF THE THE CITY OF SHERWOOD DEVELOPMENT CODE CAN BE MET. PLANT SPECIES, SIZES, LOCATIONS, QUANTITIES, AND OTHER PLAN CHANGES MAY BE SUBSTITUTED OR REVISED BY THE LANDSCAPE ARCHITECT PRIOR TO FINAL SUBMITTAL DUE TO SITE CONDITIONS AND AVAILABILITY WHERE ALLOWED BY SHERWOOD DESIGN STANDARDS.
2. ALL STREET TREES SHALL CONFORM TO APPLICABLE CITY OF SHERWOOD DESIGN STANDARDS AND TO THE AMERICAN NURSERY STANDARDS ANSI Z60.1. PLANT IN ACCORDANCE WITH 'BEST–PRACTICE' STANDARDS ADOPTED BY THE OREGON LANDSCAPE CONTRACTORS BOARD (OLCB).
3. PROVIDE TWO ROOT BARRIERS 18" DEEP X 10' LONG FOR ALL STREET TREES. CENTER ON EITHER SIDE OF TREE TRUNK ALONG SIDEWALK AND CURB. DOUBLE STAKE ALL STREET TREES PARALLEL TO STREET AND SIDEWALK. GUY WIRES AND STAKES MUST NOT INTERFERE WITH VEHICULAR OR PEDESTRIAN MOVEMENT.
4. STREET TREES SHALL, WHERE APPLICABLE, BE CENTERED IN THE PLANTING STRIP BETWEEN CURB AND SIDEWALK. ALL OTHER TREES SHALL BE PLANTED A MINIMUM OF 3' O.C. FROM BACK OF SIDEWALK OR OTHER HARDSCAPING. FIELD ADJUST IF NECESSARY TO AVOID CONFLICTS WITH STREET LIGHTS, WATER METERS, HYDRANTS, AND OTHER UTILITIES.
5. HATCHED AREAS ARE MEANT TO CONVEY GENERAL PLANT LOCATION. PLANT COVERAGE, SPACING, AND LAYOUT SHALL BE CONSISTENT WITH THE SPACING LISTED IN THE PLANT LEGEND FOR FULL COVERAGE. FIELD ADJUST PLANTING AS REQUIRED TO AVOID CONFLICTS WITH UTILITIES, LIGHTS, VAULTS, EXISTING VEGETATION, ETC.
6. LAWN OR OTHER GROUNDCOVER PLANTS SHALL BE PLANTED IN ALL AREAS BETWEEN THE CURB AND SIDEWALK. MAINTAIN A MINIMUM 3' DIAMETER MULCH RING FOR EASE OF MOWING AROUND EACH STREET TREE.
7. IRRIGATION: LANDSCAPE CONTRACTOR SHALL BE RESPONSIBLE FOR PROVIDING AND INSTALLING A PERMANENT, UNDERGROUND 'DESIGN–BUILD' AUTOMATIC IRRIGATION SYSTEM TO WATER ALL STREET TREES AND PLANTING BEDS AND OPEN SPACE PLANTINGS. COORDINATE POINT OF CONNECTION, DOUBLE CHECK VALVE ASSEMBLY OF A TYPE APPROVED BY LOCAL AND STATE JURISDICTIONS, AND SLEEVING LOCATIONS WITH GENERAL CONTRACTOR PRIOR TO INSTALLATION OF HARD SURFACING (SIDEWALKS, DRIVEWAYS, ETC.).
8. MULCH: APPLY 3" DEEP WELL–AGED MEDIUM GRIND OR SHREDDED DARK HEMLOCK BARK MULCH UNDER AND AROUND ALL PLANTINGS. DO NOT COVER FOLIAGE OR ROOT CROWNS OF PLANTS WITH BARK MULCH. TREES AND OTHER PLANTS SHALL BE SET TO ACCOMMODATE MULCH APPLICATION WITHOUT BURYING ROOT CROWNS.

TAX LOT 100
TAX MAP 2S 1 30CB
CRIMSON SPIRE OAK (TYP)
CRIMSON SPIRE OAK (TYP)
COLLECTOR ROAD
10' VISUAL
CORRIDOR
SW NURSERY WAY
PHASE 1
SW COPPER TERRACE
COLLECTOR ROAD
10' VISUAL
CORRIDOR
CHANCELLOR LINDEN (TYP)
RED SUNSET MAPLE (TYP)
RED SUNSET MAPLE (TYP)
TRACT 'A'
EXISTING STORMWATER FACILITY
TAX LOT 300
MAP 2S 1 30CB
AREA: 0.45 ACRES
PHASE 3
SW 'A' LANE
SOFT SURFACE PEDESTRIAN PATH (TYP)
PEDESTRIAN BRIDGE
TRACT 'B'
OPEN SPACE
TRACT 'C'
EXIST. CONIFER TREE
TO REMAIN (TYP)
TRACT 'F'
OPEN SPACE
CRIMSON SPIRE
OAK (TYP)
BENCH (TYP)
TRACT 'D'
OPEN SPACE
TRACT 'G'
VEGETATED CORRIDOR
LAWN (TYP)
(COUNTY ROAD NO. 1459)
SW EDY ROAD
TRACT 'I'
STORMWATER FACILITY
RED SUNSET MAPLE (TYP)
CONCRETE
BARRICADE
(COUNTY ROAD NO. A163)
SW ELWERT ROAD
TAX LOT 1100
TAX MAP 2S 1 30C
CHANCELLOR LINDEN (TYP)
BENCH (TYP)
PICNIC SHELTER
SW COPPER TERRACE
RAYWOOD ASH (TYP)
SHRUB AREA (TYP)
PEDESTRIAN
PATH (TYP)
OCTOBER GLORY
MAPLE (TYP)
TRACT 'A'
OPEN SPACE
WESTERN RED
CEDAR (TYP)
PHASE 2
SW 'B' LANE
SW YORKSHIRE WAY
CRIMSON SPIRE OAK (TYP)
TAX LOT 6600
TAX MAP 2S 1 30CB
TAX LOT 6700
TAX MAP
2S 1 30CB
TAX LOT 6800
TAX MAP
2S 1 30CB
TAX LOT 6900
TAX MAP
2S 1 30CB
TAX LOT 7000
TAX MAP
2S 1 30CB
TAX LOT 7100
TAX MAP
2S 1 30CB
SW HUNTINGTON
LANE
VINE MAPLE (TYP)
PICNIC TABLE (TYP)
TRACT 'H'
OPEN SPACE
PEDESTRIAN PATH (TYP)
WESTERN RED
CEDAR (TYP)
OCTOBER GLORY
MAPLE (TYP)
RAYWOOD ASH (TYP)
SW 'D' LANE
PHASE 4
SW 'C' TERRACE
EXIST. DECIDUOUS TREE
TO REMAIN (TYP)
TRACT 'E'
VEGETATED CORRIDOR
PUBLIC ALLEY
OCTOBER GLORY MAPLE (TYP)
SHRUB AREA
WESTERN RED CEDAR (TYP)
VINE MAPLE (TYP)
PICNIC TABLE (TYP)
LAWN (TYP)
CRIMSON SPIRE OAK (TYP)
GROUNDCOVER PLANTS (TYP)
ARTERIAL ROAD 15' VISUAL CORRIDOR
BENCH (TYP)
RED SUNSET MAPLE (TYP)
TAX LOT 7200
TAX MAP
2S 1 30CB
TAX LOT 7300
TAX MAP
2S 1 30CB
TAX LOT 7400
TAX MAP
2S 1 30CB
TAX LOT 9300
TAX MAP
2S 1 30CB

SCALE 1" = 60 FEET
60 0 24 36 48 60

AKS ENGINEERING & FORESTRY, LLC
12965 SW HERMAN RD STE 100
TUALATIN, OR 97062
P: 503.563.6151
F: 503.563.6152
aks-eng.com

ENGINEERING · SURVEYING · NATURAL RESOURCES
FORESTRY · PLANNING · LANDSCAPE ARCHITECTURE

MANDEL FARMS SUBDIVISION

SHERWOOD OREGON
TAX LOTS 250 AND 251
WASHINGTON COUNTY TAX MAP 2S 1 30CB

PRELIMINARY STREET TREE & OPEN SPACE PLAN

DESIGNED BY:	PAS/DS
DRAWN BY:	DS
CHECKED BY:	PAS
SCALE:	AS NOTED
DATE:	01–08–2016

REGISTERED LANDSCAPE ARCHITECT
PRELIMINARY NOT FOR CONSTRUCTION
KIMBERLY A. HAUSWALD
OREGON
06/05/13

REVISIONS

JOB NUMBER
4570

SHEET
P21

AKS DRAWING FILE: P16 STREET TREE.DWG | LAYOUT: P21

PLANT SCHEDULE

OPEN SPACE TREES	QTY	BOTANICAL NAME	COMMON NAME	SIZE/CONTAINER	SPACING
⊙	29	ACER CIRCINATUM	VINE MAPLE	6'–7' HT. B&B	AS SHOWN
○	14	ACER RUBRUM 'OCTOBER GLORY'	OCTOBER GLORY MAPLE	2" CAL. B&B	AS SHOWN
✺	17	THUJA PLICATA	WESTERN RED CEDAR	8'–10' HT. B&B	AS SHOWN
STREET TREES	**QTY**	**BOTANICAL NAME**	**COMMON NAME**	**SIZE/CONTAINER**	**SPACING**
⊕	68	ACER RUBRUM 'FRANKSRED'	RED SUNSET MAPLE	2" CAL. B&B	AS SHOWN
⊘	68	FRAXINUS OXYCARPA 'RAYWOOD'	RAYWOOD ASH	2" CAL. B&B	AS SHOWN
⊙	73	QUERCUS ROBUR X ALBA 'CRIMSON SPIRE'	CRIMSON SPIRE OAK	2" CAL. B&B	AS SHOWN
⊙	52	TILIA CORDATA 'CHANCOLE'	CHANCELLOR LINDEN	2" CAL. B&B	AS SHOWN

NET SITE DEVELOPMENT AREA: 557,943 SF ±
REQUIRED CANOPY COVERAGE MINIMUM: 40% (223,178 SF)
PROPOSED TOTAL CANOPY COVERAGE (PLANTED AND EXISTING): 327,734 SF (59%)

PLANTED SITE TREES:

TREE TYPE	CANOPY AREA	QUANTITY	TOTAL AREA (CANOPY AREA X QUANTITY)
OCTOBER GLORY MAPLE	(30' DIA.) 707 SF	14	9,898 SF
RED SUNSET MAPLE	(30' DIA.) 707 SF	68	48,076 SF
RAYWOOD ASH	(20' DIA.) 314 SF	68	21,352 SF
CRIMSON SPIRE OAK	(15' DIA.) 177 SF	73	12,921 SF
CHANCELLOR LINDEN	(20' DIA.) 314 SF	52	16,328 SF
WESTERN RED CEDAR	(30' DIA.) 707 SF	17	12,019 SF
			TOTAL PLANTED TREE CANOPY AREA: 120,594 SF

EXISTING SITE TREES:

TREE TYPE	CANOPY AREA	QUANTITY	TOTAL AREA (CANOPY AREA X QUANTITY X 2 EXISTING TREE CREDIT)
BIG LEAF MAPLE	(50' DIA.) 1,963 SF	24	47,112 SF
BITTER CHERRY	(20' DIA.) 314 SF	30	9,420 SF
BLACK HAWTHORN	(18' DIA.) 254 SF	9	2,286 SF
CRABAPPLE	(20' DIA.) 314 SF	3	942 SF
DOUGLAS FIR	(40' DIA.) 1,256 SF	26	32,656 SF
PACIFIC MADRONE	(30' DIA.) 707 SF	1	707 SF
WALNUT	(50' DIA.) 1,963 SF	1	1,963 SF
WESTERN RED CEDAR	(30' DIA.) 707 SF	12	8,484 SF
			TOTAL EXISTING TREE CANOPY AREA: 207,140 SF

TOTAL TREE CANOPY AREA: 327,734 SF (59%)

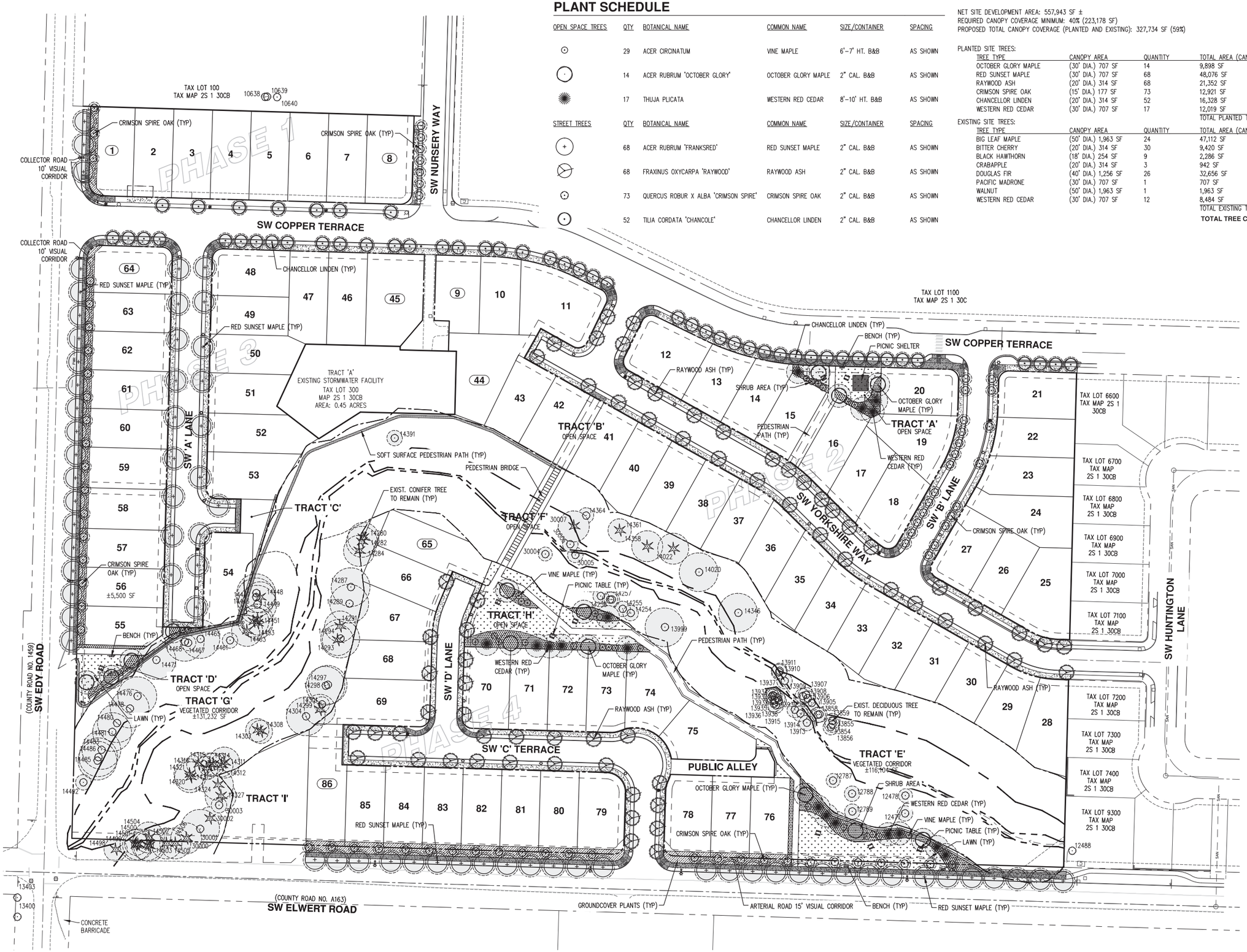

AKS ENGINEERING & FORESTRY, LLC
12965 SW HERMAN RD STE 100
TUALATIN, OR 97062
P: 503.563.6151
F: 503.563.6152
aks-eng.com

ENGINEERING · SURVEYING · NATURAL RESOURCES
FORESTRY · PLANNING · LANDSCAPE ARCHITECTURE

MANDEL FARMS SUBDIVISION

SHERWOOD OREGON
TAX LOTS 250 AND 251
WASHINGTON COUNTY TAX MAP 2S 1 30CB

PRELIMINARY TREE CANOPY PLAN

DESIGNED BY:	PAS/DS
DRAWN BY:	DS
CHECKED BY:	PAS
SCALE:	AS NOTED
DATE:	01–08–2016

REGISTERED PROFESSIONAL LANDSCAPE ARCHITECT
KIRSTEN A. MUSGAARD
OREGON
01/08/13

REVISIONS

JOB NUMBER 4570

SHEET **P22**

AKS DRAWING FILE: P21 TREE CANOPY.DWG | LAYOUT: P22

TAX LOT 100
TAX MAP 2S 1 30CB

PHASE 1

SW NURSERY WAY

SW COPPER TERRACE

TAX LOT 1100
TAX MAP 2S 1 30C

PHASE 3

PHASE 2

PHASE 4

TRACT 'A'
EXISTING STORMWATER FACILITY
TAX LOT 300
MAP 2S 1 30CB
AREA: 0.45 ACRES

3' SOFT SURFACE PATH

PEDESTRIAN BRIDGE

TRACT 'B'
OPEN SPACE

TRACT 'F'
OPEN SPACE

PICNIC SHELTER

TRACT 'A'
OPEN SPACE

SW 'A' LANE

SW 'B' LANE

SW YORKSHIRE WAY

SW 'C' TERRACE

SW 'D' LANE

PUBLIC ALLEY

TRACT 'C'
OPEN SPACE

TRACT 'D'
OPEN SPACE

PICNIC TABLE (TYP)

TRACT 'G'
VEGETATED CORRIDOR

8' AC PEDESTRIAN PATH

TRACT 'H'
OPEN SPACE

TRACT 'I'
STORMWATER FACILITY

TRACT 'E'
VEGETATED CORRIDOR

BENCH (TYP)

CONCRETE BARRICADE

(COUNTY ROAD NO. 1459)
SW EDY ROAD

(COUNTY ROAD NO. A163)
SW ELWERT ROAD

SW HUNTINGTON LANE

TAX LOT 6600
TAX MAP 2S 1 30CB

TAX LOT 6700
TAX MAP 2S 1 30CB

TAX LOT 6800
TAX MAP 2S 1 30CB

TAX LOT 6900
TAX MAP 2S 1 30CB

TAX LOT 7000
TAX MAP 2S 1 30CB

TAX LOT 7100
TAX MAP 2S 1 30CB

TAX LOT 7200
TAX MAP 2S 1 30CB

TAX LOT 7300
TAX MAP 2S 1 30CB

TAX LOT 7400
TAX MAP 2S 1 30CB

TAX LOT 9300
TAX MAP 2S 1 30CB

SCALE 1" = 60 FEET
60 0 24 36 48 60

AKS ENGINEERING & FORESTRY, LLC
12965 SW HERMAN RD STE 100
TUALATIN, OR 97062
P: 503.563.6151
F: 503.563.6152
aks-eng.com

AKS

ENGINEERING · SURVEYING · NATURAL RESOURCES
FORESTRY · PLANNING · LANDSCAPE ARCHITECTURE

MANDEL FARMS SUBDIVISION

SHERWOOD OREGON
TAX LOTS 250 AND 251 WASHINGTON COUNTY TAX MAP 2S 1 30CB

CONCEPTUAL OPEN SPACE PLAN

DESIGNED BY:	PAS/DS
DRAWN BY:	DS
CHECKED BY:	PAS
SCALE:	AS NOTED

DATE: 01-06-2016

PRELIMINARY NOT FOR CONSTRUCTION

REVISIONS

JOB NUMBER
4570

SHEET
P23