# SENTINEL SELF STORAGE ANNEX

## ENGINEERING CONSTRUCTION PLANS

CITY OF SHERWOOD CITY PLANNING CASE FILE: SP 12-03 (C.O.S. JOB 4149)

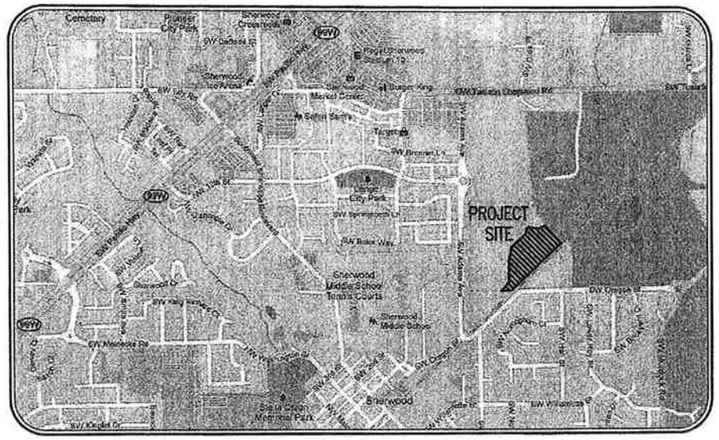


## VICINITY MAP

N. T. S.

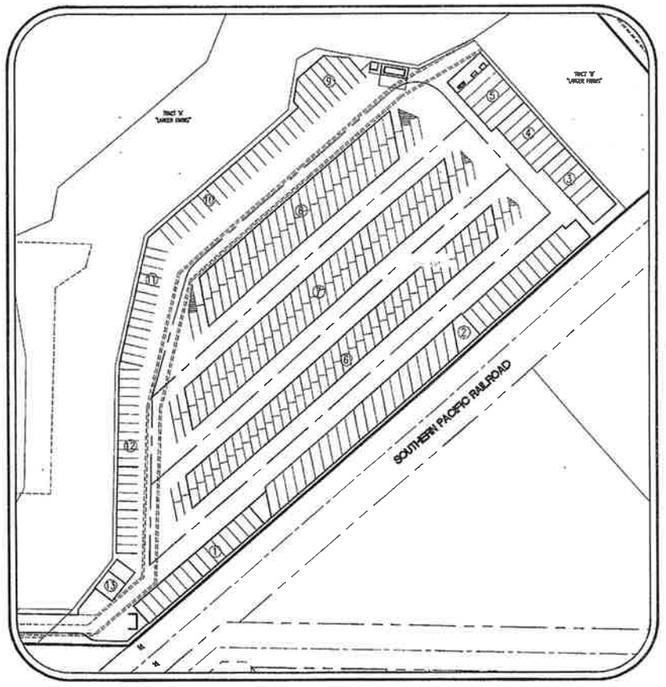


## SITE MAP

1" = 100'

## SHEET INDEX


C000 COVER SHEET WITH VICINITY AND SITE MAPS
C001 GENERAL NOTES AND LEGEND
C002 EXISTING CONDITIONS PLAN

C030 TREE PRESERVATION AND REMOVAL PLAN

EROSION CONTROL PLANS: SEE APPROVED "LANGER FARMS/SENTINEL STORAGE ANNEX EROSION AND SEDIMENT CONTROL PLANS"

C070 GRADING PLAN

C100 ACCESS DRIVEWAY PLAN, PROFILE, AND SECTION
C101 SITE PLAN
C102 STREET NOTES AND DETAILS

C200 STORMWATER PLAN
C201 PRIVATE STORM NOTES AND DETAILS

C300 SANITARY SEWER PLAN
C301 PRIVATE SANITARY NOTES AND DETAILS

C400 WATER PLAN
C401 PUBLIC WATER NOTES AND DETAILS
C402 PUBLIC WATER DETAILS
C403 PRIVATE WATER NOTES AND DETAILS

L1 LANDSCAPE PLAN

EL1 LIGHTING PLAN (EXCLUDED FROM THIS SUBMITTAL)


☑ NO EXCEPTIONS TAKEN ☐ MAKE CORRECTIONS NOTED
☐ REJECTED ☐ REVISE AND RESUBMIT
☐ SUBMIT SPECIFIED ITEM

Checking is only for general conformance with the design concept of the project and general compliance with the City of Sherwood requirements and industry standards. Any action shown is subject to compliance with the requirements of the above standards. Developer is responsible for dimensions which shall be confirmed and correlated at the job site; fabrication processes and techniques of construction; coordination of his work; and the satisfactory performance of his work. All omissions and corrections are the responsibility of the developer.

CITY OF SHERWOOD

Date: 7-15-13 By: Bob Adelstein

## ATTENTION EXCAVATORS:

OREGON LAW REQUIRES YOU TO FOLLOW RULES ADOPTED BY THE OREGON UTILITY NOTIFICATION CENTER. THOSE RULES ARE SET FORTH IN OAR 952-001-0010 THROUGH OAR 952-001-0090. YOU MAY OBTAIN COPIES OF THESE RULES FROM THE CENTER BY CALLING 503-232-1987. IF YOU HAVE ANY QUESTIONS ABOUT THE RULES, YOU MAY CONTACT THE CENTER. YOU MUST NOTIFY THE CENTER AT LEAST TWO BUSINESS DAYS, BEFORE COMMENCING AN EXCAVATION. CALL 1-800-332-2344.

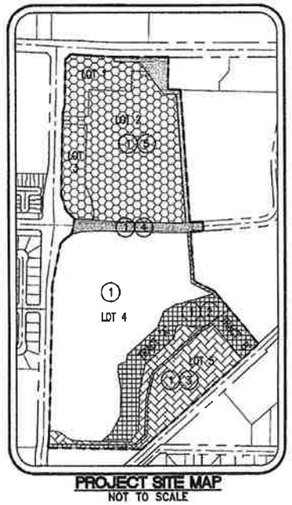


PROJECT SITE MAP
NOT TO SCALE

## PROJECT SITE MAP:

1. LANGER FARMS/SENTINEL STORAGE ANNEX EROSION AND SEDIMENT CONTROL PLANS
   - EROSION CONTROL PERMIT ENCOMPASSING ALL PROJECTS SHOWN BELOW
   - THIS PERMIT MUST BE OBTAINED AND WORK PERFORMED PRIOR TO PROCEEDING WITH ANY PROJECT.
2. LANGER FARMS REGIONAL PUBLIC STORMWATER FACILITIES (C.O.S. JOB# 4151)
   - PUBLIC STORM SEWER IMPROVEMENTS SOUTH OF SW CENTURY DRIVE
   - PUBLIC STORMWATER FACILITY
   - LANDSCAPING PLANS FOR VEGETATED CORRIDOR AND STORMWATER FACILITY
   - THIS PROJECT TO BE COMPLETED PRIOR TO:
     - ACCEPTANCE OF SW CENTURY DRIVE IMPROVEMENTS
     - OCCUPANCY OF SHERWOOD TOWN CENTER
     - OCCUPANCY OF SENTINEL SELF STORAGE ANNEX
3. SENTINEL SELF STORAGE ANNEX (C.O.S. JOB# 4149)
   - PRIVATE SITE DEVELOPMENTS
   - PRIVATE SITE ACCESS
4. SW CENTURY DRIVE EXTENSION (C.O.S. JOB# 4151)
   - PUBLIC STREET EXTENSION OF SW CENTURY DRIVE
   - PUBLIC IMPROVEMENTS WITHIN SW CENTURY DRIVE RIGHT-OF-WAY
   - PUBLIC STORM SEWER IMPROVEMENTS NORTH OF SW CENTURY DRIVE
   - THIS PROJECT TO BE COMPLETED PRIOR TO OCCUPANCY OF SHERWOOD TOWN CENTER
5. SHERWOOD TOWN CENTER (C.O.S. JOB# 4151)
   - PRIVATE SITE DEVELOPMENTS


**APPLICANT/OWNER**

LANGER FAMILY, LLC.
CONTACT: MATT LANGER
15705 SW TUALATIN-SHERWOOD RD
SHERWOOD, OR 97140

**PLANNING / CIVIL ENGINEERING SURVEYING FIRM**

AKS ENGINEERING & FORESTRY, LLC
CONTACT: ALEX HURLEY
13910 SW GALBREATH DRIVE, SUITE 100
SHERWOOD, OR 97140
PH: 503-925-8799
FAX: 503-925-8969


## UTILITY CONTACTS

**POWER**
PORTLAND GENERAL ELECTRIC
BRIAN BUSWELL
9480 SW BOECKMAN ROAD
WILSONVILLE, OR 97070
PH: 503-570-4450

**GAS**
NW NATURAL
220 NW 2ND AVENUE
PORTLAND, OR 97209
PH: 503-226-4211

**COMMUNICATIONS**
QWEST
8021 SW CAPITOL HILL ROAD
PORTLAND, OR 97219
PH: 503-242-3952

**STREETS/UTILITIES**
CITY OF SHERWOOD, PUBLIC WORKS
22560 SW PINE ST
SHERWOOD, OR 97140
503-925-2310

**SEWER**
CLEAN WATER SERVICES
2550 SW HILLSBORO HWY
HILLSBORO, OR 97123
PH: 503-681-3600

**COMMUNICATIONS**
COMCAST CABLE
10831 SW CASCADE AVENUE
TIGARD, OR 97223
PH: 503-596-3754

**COMMUNICATIONS**
VERIZON (FRONTIER)
4155 SW CEDAR HILLS BLVD
BEAVERTON, OR 97005
PH: 503-526-3544

**BUILDING DEPARTMENT**
CITY OF SHERWOOD BUILDING DEPT.
22560 SW PINE ST
SHERWOOD, OR 97140
503-625-4226

**SITE DESCRIPTION:** LOCATED IN THE SOUTHEAST 1/4 OF SECTION 29, TOWNSHIP 2 SOUTH, RANGE 1 WEST, WILLAMETTE MERIDIAN, CITY OF SHERWOOD, WASHINGTON COUNTY, OREGON

**SITE LOCATION:** EAST OF SW LANGER FARMS PARKWAY, SOUTH OF TUALATIN-SHERWOOD ROAD, NORTH OF SW OREGON STREET

**PROJECT PURPOSE:** SELF STORAGE BUSINESS

**TOTAL SITE AREA:** 6.93 ACRES±

THIS DESIGN COMPLIES WITH ORS 92.044(7), IN THAT NO UTILITY INFRASTRUCTURE IS DESIGNED TO BE WITHIN ONE (1) FOOT OF A SURVEY MONUMENT LOCATION SHOWN ON A SUBDIVISION OR PARTITION PLAT. NO DESIGN MODIFICATION NOR FINAL FIELD LOCATION CHANGE SHALL BE PERMITTED IF IT WOULD CAUSE ANY UTILITY INFRASTRUCTURE TO BE PLACED WITHIN THE PROHIBITED AREA.

COVER SHEET WITH VICINITY AND SITE MAPS

**PERMIT SET**
SENTINEL SELF STORAGE ANNEX
SHERWOOD OREGON
TAX LOT 300
WASHINGTON COUNTY TAX MAP 2S 1 29D


AKS ENGINEERING & FORESTRY
ENGINEERING · PLANNING
SURVEYING · FORESTRY
13910 SW GALBREATH DR.,
SUITE 100
SHERWOOD, OR 97140
PHONE: (503) 925-8799
FAX: (503) 925-8969


| | |
|---|---|
| DESIGNED BY: | AHH |
| DRAWN BY: | MTS |
| CHECKED BY: | JPC |
| DRAWING NO.: | E2-C000 |
| SCALE: | AS NOTED |

PREPARED FOR:
LANGER FAMILY, LLC.
15705 SW TUALATIN-SHERWOOD RD
SHERWOOD, OR 97140

DATE: 06/21/13

REGISTERED PROFESSIONAL ENGINEER
OREGON
JANUARY 15, 2013
ALEXANDER H. HURLEY
RENEWAL DATE: 6/30/15

JOB NUMBER
2929

SHEET
C000

## GENERAL NOTES

1. ALL WORK AND MATERIAL SHALL CONFORM TO THESE PLANS, THE APPLICABLE PROVISIONS OF THE INTERNATIONAL BUILDING CODE, UNIFORM PLUMBING C DE, THE CITY OF SHERWOOD, AND ALL APPLICABLE LOCAL, STATE, AND FEDERAL REGULATIONS.

2. THE LOCATIONS, DEPTH AND DESCRIPTION OF EXISTING UTILITIES SHOWN ARE COMPILED FROM AVAILABLE RECORDS AND/OR FIELD SURVEYS. THE ENGINEE OR UTILITY COMPANIES DO NOT GUARANTEE THE ACCURACY OR THE COMPLETENESS OF SUCH RECORDS. ADDITIONAL UTILITIES MAY EXIST WITHIN THE WORK AREA

3. THE LOCATION OF EXISTING UTILITIES SHOWN ON THE PLANS ARE APPROXIMATE AND SHOWN FOR INFORMATION PURPOSES ONLY. THE CONTRACTOR SHALL HAVE ALL UTILITIES LOCATED PRIOR TO COMMENCING CONSTRUCTION. NOTIFY ENGINEER OF ANY DISCREPANCIES PRIOR TO CONSTRUCTION. ADDITIONAL UNDERGROUND UTILITIES MAY EXIST.

4. CONTRACTOR MUST VERIFY ALL EXISTING UTILITIES FOR BOTH VERTICAL ELEVATION AND HORIZONTAL LOCATION PRIOR TO START OF WORK (POTHOLE BEFORE DIGGING IF NECESSARY). SHOULD CONFLICTS ARISE AND REDESIGN OR RELOCATION OF FACILITIES BE NECESSARY, IT SHALL BE DONE AT THE CONTRACTOR'S EXPENSE. CHANGES MUST BE APPROVED BY THE PROJECT ENGINEER AND CITY OF HILLSBORO IN ADVANCE OF WORK. CONTRACTOR SHALL COORDINATE THE WORK WITH UTILITY AGENCIES.

5. SUBSEQUENT SETTLEMENT OR CRACKING OF FINISHED SURFACE WITHIN THE WARRANTY PERIOD SHALL BE CONSIDERED TO BE A FAILURE OF THE SUBGRADE AND REPAIRED.

6. THE CONTRACTOR SHALL CONTROL TRAFFIC IN CONFORMANCE WITH THE LATEST EDITION OF "MANUAL ON UNIFORM TRAFFIC CONTROL DEVICES", "OREGON SUPPLEMENTS", AND CITY OF SHERWOOD REQUIREMENTS. THE CONTRACTOR SHALL AT ALL TIMES MAINTAIN LOCAL ACCESS ALONG THE PROJECT SITE. THE CONTRACTOR SHALL PROVIDE A PROJECT SPECIFIC TRAFFIC CONTROL PLAN, APPROVED BY THE OWNER, AND AVAILABLE ON THE PROJECT SITE.

7. THE CONTRACTOR SHALL HAVE A MINIMUM OF ONE (1) SET OF APPROVED CONSTRUCTION PLANS ON THE JOB SITE AT ALL TIMES DURING THE CONSTRUCTION PHASES.

8. CONTRACTOR SHALL COORDINATE AND SCHEDULE ALL EARTHWORK, TRENCH BACKFILL, ROAD CONSTRUCTION COMPACTION TESTS, AND GEOTECHNICAL REVIEWS WITH THE PROJECT'S GEOTECHNICAL ENGINEER.

9. CONTRACTOR SHALL MAINTAIN BENCHMARKS, PROPERTY CORNERS, MONUMENTS, AND OTHER REFERENCE POINTS. IF SUCH POINTS ARE DISTURBED OR DESTROYED BY CONSTRUCTION ACTIVITIES, THE CONTRACTOR SHALL NOTIFY THE PROJECT ENGINEER AND PAY FOR THEIR REPLACEMENT BY EMPLOYING A PROFESSIONAL LAND SURVEYOR TO RESET PROPERTY CORNERS AND OTHER SUCH MONUMENTS.

10. PRIOR TO BEGINNING WORK, THE CONTRACTOR SHALL PRESENT AT THE PRE-CONSTRUCTION MEETING A LIST OF SUBCONTRACTORS, A PROJECT SCHEDULE, A TRAFFIC CONTROL PLAN, AND AN EMERGENCY CONTACT NAME AND PHONE NUMBER.

11. PRIOR TO FINAL ACCEPTANCE AND PAYMENT, THE CONTRACTOR SHALL CLEAN THE WORK SITE AND ADJACENT AREAS OF ANY DEBRIS, DISCARDED ASPHALTIC CONCRETE MATERIAL, OR OTHER ITEMS DEPOSITED BY THE CONTRACTOR'S PERSONNEL DURING THE PERFORMANCE OF THIS CONTRACT.

12. PUBLIC ROADWAY SHALL NOT BE CLOSED TO TRAFFIC, AT ANY TIME, WITHOUT HAVING FIRST OBTAINED WRITTEN APPROVAL FROM THE CITY. THE CONTRACTOR IS RESPONSIBLE FOR PROVISION OF TIMELY NOTIFICATION OF TRAFFIC FLOW DISRUPTIONS TO AREA WIDE EMERGENCY SERVICES.

13. TRAFFIC CONTROL DEVICES, FLAG PERSONS, ETC., SHALL BE IN PLACE PRIOR TO INITIATION OF CONSTRUCTION WORK AND SHALL BE EFFECTIVELY MAINTAINED.

14. A COPY OF THE PERMIT WITH ALL ATTACHMENTS, A COPY OF THE APPROVED CONSTRUCTION PLANS, AND ALL AMENDMENTS SHALL BE AVAILABLE AT THE PROJECT SITE AT ALL TIMES. ALL WORK SHALL CONFORM TO THE PERMIT TERMS, CONDITIONS/PROVISIONS, THE CITY APPROVED CONSTRUCTION PLANS, APPROVED PLAN AMENDMENTS, AND TO THESE GENERAL CONDITIONS. CHANGES TO ANY OF THE AFORESAID MUST BE APPROVED BY THE PROJECT ENGINEER AND THE CITY, IN ADVANCE OF WORK PERFORMANCE.

15. MAINTENANCE OF THE WORK AREA AND APPROACH ROADS IS THE RESPONSIBILITY OF THE CONTRACTOR. THE WORK AREA AND APPROACH ROADS SHALL BE MAINTAINED IN A CLEAN AND SANITARY CONDITION, FREE FROM OBSTRUCTIONS, HAZARDS, DEBRIS, AND TRASH AT ALL TIMES. A COPY OF THE CONTRACTOR CERTIFICATE OF INSURANCE SHALL BE AVAILABLE AT THE WORK AREA.

16. THE SPREADING OF MUD OR DEBRIS OR STORAGE OF MATERIAL OR EQUIPMENT OF ANY KIND UPON ANY PUBLIC ROADWAY IS STRICTLY PROHIBITED AND VIOLATION SHALL BE CAUSE FOR IMMEDIATE SUSPENSION OF THE PERMIT. THE PROJECT ENGINEER AND/OR THE CITY MAY AT ANY TIME ORDER IMMEDIATE CLEAN UP AND STOPPAGE OF WORK TO ACCOMPLISH CLEAN UP.

17. EFFECTIVE EROSION CONTROL IS REQUIRED. EROSION CONTROL DEVICES MUST BE INSTALLED AND MAINTAINED.

18. EFFECTIVE DRAINAGE CONTROL IS REQUIRED. DRAINAGE SHALL BE CONTROLLED WITHIN THE SITE AND SHALL BE ROUTED SO THAT ADJACENT PRIVATE PROPERTY, PUBLIC PROPERTY, AND THE RECEIVING SYSTEM ARE NOT ADVERSELY IMPACTED. THE PROJECT ENGINEER AND/OR THE CITY MAY AT ANY TIME ORDER CORRECTIVE ACTION AND STOPPAGE OF WORK TO ACCOMPLISH EFFECTIVE DRAINAGE CONTROL.

19. A TEMPORARY HARD-SURFACE PATCH (COLD MIX AC OR HOT MIX BASE PAVING) SHALL BE PLACED ON TRENCHES WITHIN EXISTING ROADWAYS AT THE END OF EACH DAY'S WORK. NO TRENCH, ON SITE OR OFF-SITE, SHALL BE LEFT AT ANY TIME IN AN UNSAFE CONDITION. THE CONTRACTOR IS RESPONSIBLE FOR AND IS LIABLE FOR HAZARDS OR DAMAGE RESULTING FROM THE PROSECUTION OF THE WORK.

20. THE CONTRACTOR SHALL PROTECT AND MAINTAIN OPERATION OF ALL EXISTING UTILITIES WITHIN THE CONSTRUCTION AREA THROUGHOUT THE CONSTRUCTION PROCESS AND SHALL BE RESPONSIBLE FOR REPLACEMENT OR REPAIR OF ALL EXISTING UTILITIES WHICH ARE DISTURBED. THE CONTRACTOR SHALL COORDINATE ALL WORK ON UTILITIES WITH THE VARIOUS OWNERS.

21. DOWNTIME FOR UTILITIES SHALL BE HELD TO A MINIMUM AND COORDINATED WITH THE OWNER PRIOR TO DISRUPTION. INTERRUPTION SHALL BE IN ACCORDANCE WITH A SCHEDULE OF SHUTDOWNS TO BE PROVIDED BY THE CONTRACTOR AND APPROVED BY THE OWNER.

22. UPON COMPLETION OF CONSTRUCTION, THE CONTRACTOR SHALL SUBMIT "REDLINE DRAWINGS" TO THE PROJECT ENGINEER AND OWNER. "REDLINE DRAWINGS" DOCUMENT ALL DEVIATIONS AND REVISIONS TO THE APPROVED PLANS; THEY ALSO RECORD A DESCRIPTION OF CONSTRUCTION MATERIALS ACTUALLY USED (PIPE MATERIALS, ETC.).

23. THE CONTRACTOR SHALL PROCURE AND CONFORM TO ALL CONSTRUCTION PERMITS REQUIRED BY THE CITY OR OTHER APPLICABLE AGENCIES

24. ANY INSPECTION BY THE CITY, COUNTY, STATE, OR FEDERAL AGENCIES OR THE PROJECT ENGINEER SHALL NOT, IN ANY WAY, RELIEVE THE CONTRACTOR FROM ANY OBLIGATION TO PERFORM THE WORK IN COMPLIANCE WITH THE APPLICABLE CODES, REGULATION, CITY STANDARDS, AND PROJECT CONTRACT DOCUMENTS.

25. THE PROJECT ENGINEER MUST BE NOTIFIED OF ALL CONSTRUCTION MODIFICATIONS. PRIOR APPROVAL MUST BE PROVIDED BY THE PROJECT ENGINEER BEFORE MODIFICATIONS TO THE APPROVED DESIGN ARE INITIATED.

26. SITE CONSTRUCTION PRACTICES SHALL BE IN ACCORDANCE WITH OSHA REGULATIONS. THE CONTRACTOR SHALL MAINTAIN ON-SITE LEGIBLE MATERIAL SAFETY SHEETS FOR ALL HAZARDOUS MATERIALS USED ON-SITE.

27. THE CONTRACTOR SHALL GIVE THE APPROPRIATE INSPECTION AGENCY TWO (2) WORKING DAYS ADVANCE NOTICE WHEN REQUESTING INSPECTIONS.

28. THE CONTRACTOR SHALL TAKE NO ADVANTAGE OF ANY ERRORS, OMISSIONS, OR DISCREPANCIES IN THE PLANS. WHEN ERRORS, OMISSIONS, OR DISCREPANCIES ARE FOUND, THE ENGINEER SHALL BE NOTIFIED. WORK PERFORMED BY THE CONTRACTOR AS A RESULT OF AN ERROR, OMISSION, OR DISCREPANCY IN THE PLANS SHALL BE AT THE CONTRACTOR'S RISK AND EXPENSE WHEN SUCH ERROR, OMISSION, OR DISCREPANCY HAS NOT BEEN BROUGHT TO THE ATTENTION OF THE ENGINEER.

29. CONTRACTOR SHALL MAINTAIN AN ADEQUATE FIRE LANE DURING CONSTRUCTION.

30. CONTRACTOR SHALL RESTRIPE AC PAVEMENT AND CONCRETE PAVEMENT WHERE REQUIRED DUE TO NEW CONSTRUCTION.

31. CONTRACTOR SHALL MAINTAIN ACCESS TO EXISTING ROADWAYS AND FACILITIES AS DETERMINED NECESSARY BY OWNER.

32. CONTRACTOR SHALL REPLACE, IN KIND, ALL AC PAVEMENT, CONCRETE, LANDSCAPING, AND IRRIGATION WHICH IS REMOVED OR DISTURBED DURING INSTALLATION OF PIPELINE AND PLACEMENT OF MANHOLES.

33. CONTRACTOR SHALL COORDINATE CONSTRUCTION TO PREVENT ELEVATION CONFLICTS.

34. THE RESPONSIBILITY FOR CONSTRUCTION OF SITE UTILITIES SHALL BEGIN AT 5' OUTSIDE THE BUILDING SLAB.

35. UTILITIES SHOWN ARE DRAWN SCHEMATICALLY. UTILITY PLANS MAY NOT REFLECT THE ACTUAL SPACING AND HORIZONTAL / VERTICAL LOCATION OF NEW OR EXISTING UTILITIES. PLANS DO NOT SHOW ALL BENDS, REDUCERS, WYES, GASKETS, CLEANOUTS, FITTINGS, AND STRUCTURES. CONTRACTOR IS RESPONSIBLE FOR MATERIALS AND LABOR NECESSARY TO CONSTRUCT UTILITIES SHOWN AS INTENDED IN ACCORDANCE WITH APPLICABLE MANUFACTURER, LOCAL, STATE, AND FEDERAL REQUIREMENTS.

## ADDITIONAL NOTES:

1. PIPE LENGTHS SHOWN ARE APPROXIMATE.

2. PROPERTY AND RIGHT-OF-WAY LINES SHOWN ARE APPROXIMATE. THESE PLANS ARE NOT MEANT TO SERVE BOUNDARY SURVEY PURPOSES.

3. THE CONTRACTOR SHALL PERFORM ALL WORK NECESSARY TO COMPLETE THIS PROJECT IN ACCORDANCE WITH THE PLANS AND SPECIFICATIONS INCLUDING SUCH INCIDENTALS AS MAY BE NECESSARY TO MEET THE INTENT OF THE PROJECT CONTRACT DOCUMENTS, APPLICABLE AGENCY REQUIREMENTS, AND OTHER WORK AS NECESSARY TO PROVIDE A COMPLETE PROJECT.

4. THE PROJECT ENGINEER RESERVES THE RIGHT TO ADJUST GRADES OR ALIGNMENT TO ACCOMMODATE OTHER UTILITIES AS REQUIRED; SUCH ADJUSTMENTS OR REVISIONS SHALL BE REVIEWED AND APPROVED BY THE CITY PRIOR TO COMMENCEMENT OF WORK.

5. THESE PLANS ASSUME THAT CONSTRUCTION STAKING WILL BE NECESSARY TO CONSTRUCT THE IMPROVEMENTS SHOWN AND THAT CONSTRUCTION STAKING ACTIVITIES WILL BE PERFORMED BY AKS ENGINEERING & FORESTRY LLC. AKS ENGINEERING & FORESTRY LLC. DOES NOT ACCEPT ANY RESPONSIBILITY FOR ITEMS CONSTRUCTED INCORRECTLY BASED ON MISINTERPRETATIONS OF ITEMS SHOWN ON THESE PLANS.

## FIRE DEPARTMENT NOTES – FOR PRIVATE WATER SYSTEMS:

1. PRIVATE FIRE SERVICE MAINS SHALL COMPLY WITH NATIONAL FIRE PROTECTION ASSOCIATION STANDARD 24, INSTALLATION OF PRIVATE FIRE SERVICE MAINS AND THEIR APPURTENANCES 2007 EDITION (OFC, CHAPTER 47).

2. CLEARANCE SHALL BE PROVIDED AROUND ALL PIPING EXTENDING THOUGH VAULT WALLS. HOLES SHALL BE SIZED SUCH THAT THE DIAMETER OF THE HOLES IS NOMINALLY 2 INCHES LARGER THAN THE PIPE FOR PIPE 1 INCH NOMINAL TO 3.5 INCH NOMINAL AND 4 INCHES LARGER THAN THE PIPE FOR PIPE 4 INCH NOMINAL AND LARGER (NFPA 13, 9.3.4).

3. WHERE PIPE MUST BE RUN UNDER BUILDINGS, SPECIAL PRECAUTIONS SHALL BE TAKEN, INCLUDING THE FOLLOWING (NFPA 24, 10.6):
   - ARCHING THE FOUNDATION WALLS OVER THE PIPE
   - RUNNING PIPE IN COVERED TRENCHES
   - PROVIDING VALVES TO ISOLATE SECTIONS OF THE PIPE UNDER BUILDINGS

4. ALL PRIMARY CONTROL VALVES ON THE PROPOSED DOUBLE DETECTOR CHECK VALVE ASSEMBLY (DDCVA) SHALL BE ELECTRONICALLY SUPERVISED BY A LISTED FIRE ALARM CONTROL UNIT (OFC, 903.4.1).

5. PRIOR TO THE UNDERGROUND FIRE SERVICE BEING APPROVED THE REDUCED PRESSURE BACKFLOW PREVENTION ASSEMBLIES SHALL BE FORWARD FLOW TESTED IN COMPLIANCE WITH THE MANUFACTURE'S RECOMMENDATIONS, AND DOCUMENTATION SHALL BE SUBMITTED TO TUALATIN VALLEY FIRE AND RESCUE FOR REVIEW (NFPA 13, 10.10.2.8).

6. ALL BOLTED JOINT ACCESSORIES SHALL BE CLEANED AND THOROUGHLY COATED WITH ASPHALT OR OTHER CORROSION RETARDING MATERIAL, AND THEN WRAPPED IN PLASTIC AFTER INSTALLATION AND PRIOR TO BACKFILL (NFPA 24, 10.3.5.2).

7. FIRE SERVICE MAINS SHALL BE THOROUGHLY FLUSHED BEFORE CONNECTION IS MADE TO SYSTEM PIPING IN ORDER TO REMOVE FOREIGN MATERIALS THAT MIGHT HAVE ENTERED THE MAIN DURING THE COURSE OF THE INSTALLATION OR THAT MIGHT HAVE BEEN PRESENT IN EXISTING PIPING. THE FLUSHING OF LOOPED SYSTEMS MAY REQUIRE THE INSTALLATION OF ADDITIONAL SECTIONAL CONTROL VALVES TO ALLOW THE SYSTEMATICAL FLUSHING OF THE SYSTEM TO DESIGNATED END POINTS TO ENSURE THAT DEBRIS CAN BE SUCCESSFULLY REMOVED FROM THE SYSTEM (NFPA 24, 6.5).

8. UNDERGROUND PIPE JOINTS, THRUST BLOCKS, AND OTHER ANCHORS SHALL BE LEFT EXPOSED FOR INSPECTION. THE TRENCH SHALL BE BACKFILLED BETWEEN JOINTS OR WEIGHTED BEFORE PRESSURE TESTING TO PREVENT MOVEMENT OF THE PIPING (NFPA 24, 10.10.2).

9. ALL UNDERGROUND FIRE LINES SHALL BE PRESSURIZED TO 200 PSI, OR 50 PSI ABOVE THE MAXIMUM STATIC PRESSURE. THE PRESSURE TEST SHALL BE MAINTAINED FOR A MINIMUM OF 2 HOURS PRIOR TO THE SCHEDULED INSPECTION TIME (NFPA 24, 10.10.2.2.3).

10. ALL CONTROL VALVES SHALL BE FULLY CLOSED AND OPENED UNDER SYSTEM WATER PRESSURE TO ENSURE PROPER OPERATION (NFPA 24, 10.10.2.4.3).

11. FLUSHING SHALL BE OF SUFFICIENT MAGNITUDE AND DURATION TO FLUSH ALL FOREIGN MATERIAL OUT OF THE LINES, VALVES, AND HYDRANTS. THE FLUSHING VELOCITY SHALL BE A MINIMUM OF 2.5 FEET PER SECOND (FT/S) FOR NON-FIRE PROTECTION LINES. WHERE THE MAIN SUPPLIES A FIRE PROTECTION SYSTEM THE VELOCITY SHALL MEET THE NFPA 24 REQUIREMENT OF 10 FT/S (NFPA 24 10.10.2.1.3).

12. DISCHARGED WATER SHALL BE SCREENED AND COLLECTED OR DIVERTED IN ACCORDANCE WITH APPLICABLE SWPPP/NPDES PROVISIONS OF CLEAN WATER SERVICES.

13. ALL NEW HYDRANTS SHALL BE 5-1/4 INCH DRY BARREL HYDRANTS AND UL LISTED/FM APPROVED. HYDRANTS SHALL HAVE ONE 4-1/2" PUMPER CONNECTION AND TWO 2-1/2" HOSE CONNECTIONS, WITH NATIONAL STANDARD FIRE HOSE COUPLING SCREW THREADS. THE 4-1/2" PUMPER NOZZLE SHALL FACE TOWARD THE NEAREST STREET, ROAD, DRIVE OR PARKING AREA. HYDRANTS SHALL BE PAINTED YELLOW, AND SET ON CONCRETE SLABS OR FLAT STONES. HYDRANTS SHALL BE SET PLUMB AND TRUE WITH THE CENTER OF THE LOWEST NOZZLE AT LEAST 18 INCHES ABOVE SURROUNDING FINISHED GRADE. THE BREAKAWAY POINT OF THE COUPLING OR THE FLANGE WITH THE BREAKAWAY BOLTS MUST BE INSTALLED ABOVE GRADE, BUT NOT HIGHER THAT 6 INCHES ABOVE GRADE. A MINIMUM OF 36 INCHES OF WORKING CLEARANCE SHALL BE MAINTAINED AROUND ANY HYDRANT (HMC, 11.28).

14. BLUE REFLECTIVE FIRE HYDRANT MARKERS SHALL BE PROVIDED ON THE ROADWAY TO IDENTIFY FIRE HYDRANT LOCATIONS. THE MARKERS SHALL BE SECURED TO THE ROADWAY DIRECTLY IN LINE THE THE HYDRANT AND AS FOLLOWS (HMC, 11.28):
   - ON ROADWAYS WITHOUT CENTER STRIPED, THE BLUE MARKER SHALL BE SET IN THE CENTER OF THE ROADWAY
   - ON UNDIVIDED, STRIPED ROADWAYS, BLUE MARKERS SHALL BE SET 6 INCHES TO THE HYDRANT SIDE OF THE CENTER STRIPE
   - ON DIVIDED ROADWAYS, BLUE MARKERS SHALL BE SET 6 INCHES TO THE SIDE OF THE LANE STRIPING THAT IS CLOSEST TO THE HYDRANT

15. A MINIMUM OF 3 FEET OF WORKING CLEARANCE SHALL BE MAINTAINED AROUND FIRE PROTECTION EQUIPMENT (I.E. FIRE HYDRANTS, PIV'S, FDC'S, ETC) (HMC, 11.28)

16. A MATERIAL DATA SUBMITTAL PACKAGE SHALL BE SUBMITTED TO TUALATIN VALLEY FIRE AND RESCUE CONTAINING MANUFACTURER'S TECHNICAL DATA SHEETS FOR ALL UNDERGROUND COMPONENTS IN ACCORDANCE WITH NFPA 24, 4.1,

17. A COPY OF THE CONTRACTOR'S MATERIAL AND TEST CERTIFICATE FOR UNDERGROUND PIPING IN COMPLIANCE WITH NFPA 24 SHALL BE SUBMITTED TO THE FIRE MARSHALL'S OFFICE FOR REVIEW (NFPA 24, 10.10.2.2.3).

## LEGEND

| | EXISTING | PROPOSED | | EXISTING | PROPOSED |
|---|---|---|---|---|---|
| DECIDUOUS TREE | | | STORM SEWER CLEAN OUT | | |
| CONIFEROUS TREE | | | STORM SEWER CATCH BASIN | | |
| FIRE HYDRANT | | | STORM SEWER MANHOLE | | |
| WATER BLOWOFF | | | GAS METER | | |
| WATER METER | | | GAS VALVE | | |
| WATER VALVE | | | GUY WIRE ANCHOR | | |
| DOUBLE CHECK VALVE | | | POWER POLE | | |
| AIR RELEASE VALVE | | | POWER VAULT | | |
| SANITARY SEWER CLEAN OUT | | | POWER JUNCTION BOX | | |
| SANITARY SEWER MANHOLE | | | POWER PEDESTAL | | |
| SIGN | | | COMMUNICATIONS VAULT | | |
| STREET LIGHT | | | COMMUNICATIONS JUNCTION BOX | | |
| MAILBOX | | | COMMUNICATIONS RISER | | |

| | EXISTING | PROPOSED |
|---|---|---|
| RIGHT-OF-WAY LINE | | |
| BOUNDARY LINE | | |
| PROPERTY LINE | | |
| CENTERLINE | | |
| DITCH | | |
| CURB | | |
| EDGE OF PAVEMENT | | |
| EASEMENT | | |
| FENCE LINE | | |
| GRAVEL EDGE | | |
| POWER LINE | PWR | PWR |
| OVERHEAD WIRE | OHW | OHW |
| COMMUNICATIONS LINE | COM | COM |
| GAS LINE | GAS | GAS |
| STORM SEWER LINE | STM | STM |
| SANITARY SEWER LINE | SAN | SAN |
| WATER LINE | WAT | WAT |

APPROVED
CONSTRUCTION PLANS
(See cover sheet approval for any conditions)
City of Sherwood
Engineering Division
Date: 7/15/13

GENERAL NOTES AND LEGEND

PERMIT SET
SENTINEL SELF STORAGE ANNEX
SHERWOOD
OREGON
WASHINGTON COUNTY TAX MAP 2S 1 23D
TAX LOT 300

AKS ENGINEERING & FORESTRY
ENGINEERING · PLANNING
SURVEYING · FORESTRY
13910 SW GALBREATH DR.,
SUITE 100
SHERWOOD, OR 97140
PHONE: (503) 925-8799
FAX: (503) 925-8889

| | |
|---|---|
| DESIGNED BY: | AHH |
| DRAWN BY: | MTS |
| CHECKED BY: | JPC |
| DRAWING NO.: | E2-C000 |
| SCALE: | AS NOTED |

PREPARED FOR:
LANGER FAMILY, LLC.
15705 SW TUALATIN-SHERWOOD RD
SHERWOOD, OR 97140

DATE: 06/21/13

REGISTERED PROFESSIONAL ENGINEER
65539PE
OREGON
JANUARY 15, 2013
ALEXANDER H. HURLEY
RENEWAL DATE: 6/30/15

JOB NUMBER
2929

SHEET
C001

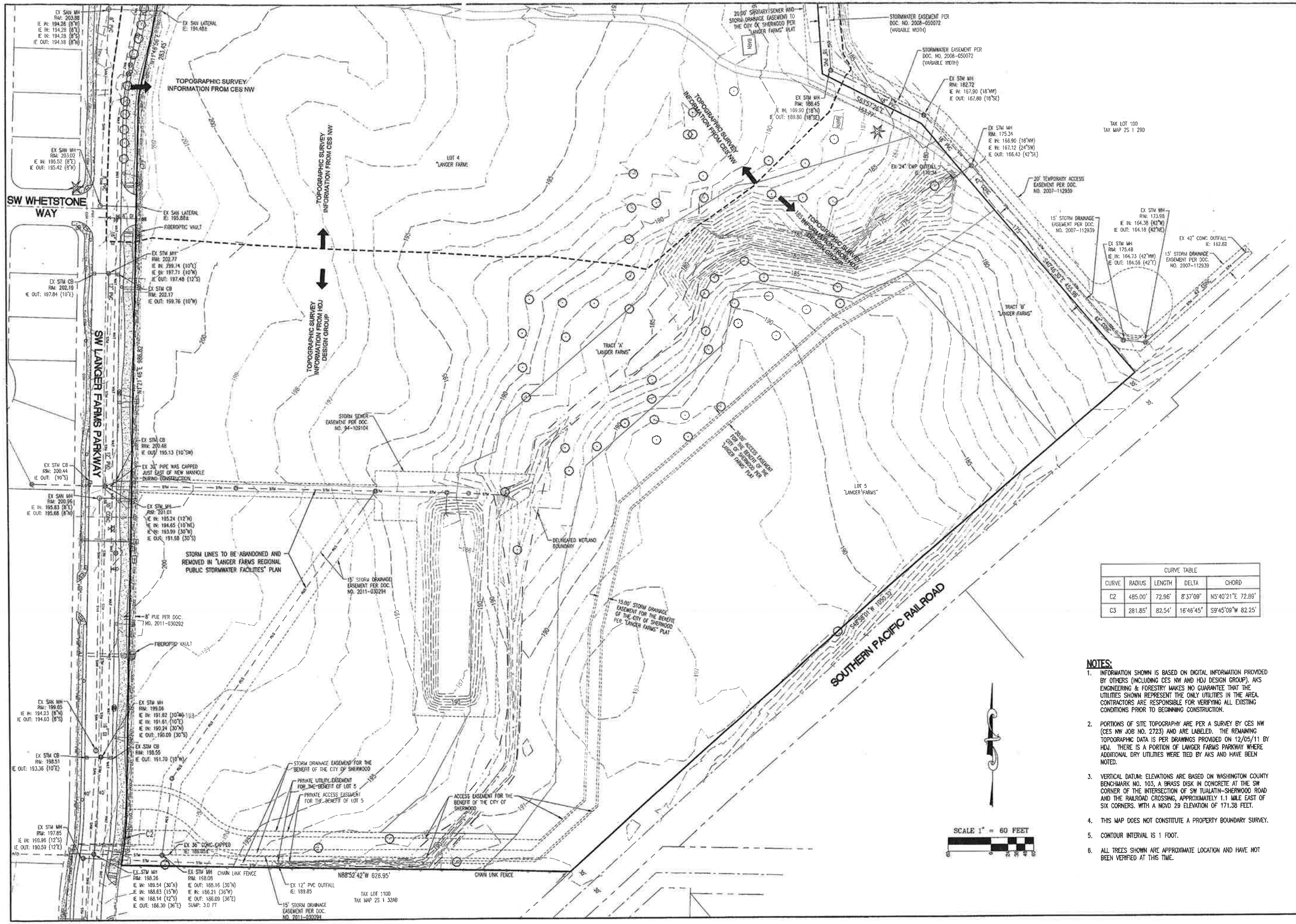


| CURVE TABLE | | | | |
|---|---|---|---|---|
| CURVE | RADIUS | LENGTH | DELTA | CHORD |
| C2 | 485.00' | 72.96' | 8°37'09" | N5°40'21"E 72.89' |
| C3 | 281.85' | 82.54' | 16°46'45" | S9°45'09"W 82.25' |

## NOTES:

1. INFORMATION SHOWN IS BASED ON DIGITAL INFORMATION PROVIDED BY OTHERS (INCLUDING CES NW AND HDJ DESIGN GROUP). AKS ENGINEERING & FORESTRY MAKES NO GUARANTEE THAT THE UTILITIES SHOWN REPRESENT THE ONLY UTILITIES IN THE AREA. CONTRACTORS ARE RESPONSIBLE FOR VERIFYING ALL EXISTING CONDITIONS PRIOR TO BEGINNING CONSTRUCTION.
2. PORTIONS OF SITE TOPOGRAPHY ARE PER A SURVEY BY CES NW (CES NW JOB NO. 2723) AND ARE LABELED. THE REMAINING TOPOGRAPHIC DATA IS PER DRAWINGS PROVIDED ON 12/05/11 BY HDJ. THERE IS A PORTION OF LANGER FARMS PARKWAY WHERE ADDITIONAL DRY UTILITIES WERE TIED BY AKS AND HAVE BEEN NOTED.
3. VERTICAL DATUM: ELEVATIONS ARE BASED ON WASHINGTON COUNTY BENCHMARK NO. 103, A BRASS DISK IN CONCRETE AT THE SW CORNER OF THE INTERSECTION OF SW TUALATIN-SHERWOOD ROAD AND THE RAILROAD CROSSING, APPROXIMATELY 1.1 MILE EAST OF SIX CORNERS. WITH A NGVD 29 ELEVATION OF 171.38 FEET.
4. THIS MAP DOES NOT CONSTITUTE A PROPERTY BOUNDARY SURVEY.
5. CONTOUR INTERVAL IS 1 FOOT.
6. ALL TREES SHOWN ARE APPROXIMATE LOCATION AND HAVE NOT BEEN VERIFIED AT THIS TIME.

# EXISTING CONDITIONS PLAN

**PERMIT SET**

**SENTINEL SELF STORAGE ANNEX**
**SHERWOOD OREGON**
WASHINGTON COUNTY TAX MAP 2S 1 29D
TAX LOT 300

AKS ENGINEERING & FORESTRY
ENGINEERING · PLANNING
SURVEYING · FORESTRY
13910 SW GALBREATH DR.,
SUITE 100
SHERWOOD, OR 97140
PHONE: (503) 925-8799
FAX: (503) 925-8869

DESIGNED BY:
DRAWN BY: MSK
CHECKED BY: RDR
DRAWING NO.: E2-C002
SCALE: AS NOTED

**PREPARED FOR:**
LANGER FAMILY, LLC.
15705 SW TUALATIN-SHERWOOD RD
SHERWOOD, OR 97140

DATE: 06/21/13

REGISTERED PROFESSIONAL LAND SURVEYOR
OREGON
JULY 15, 2003
ALEXANDER H. HURLEY
55539LS
RENEWS: 6/30/15

JOB NUMBER
2929

SHEET
C002

## Detailed Tree Inventory for Sentinel Self Storage Annex

NO. 2929

| AKS Survey Reference # | Total DBH (in) | Tree Species | Condition/Comments | Hazard Rating 1-4* | Reason for Removal | Windthrow Rating** | ***Save/Remove |
|---|---|---|---|---|---|---|---|
| 10317 | 21 | Black Walnut (Juglans nigra) | Scars, Broken limbs, OK | 2 | Permitted Buildings and Driveways | B | 0 |
| 10318 | 10 | Black Walnut (Juglans nigra) | Some scars, OK | 1 | Permitted Buildings and Driveways | B | 0 |
| 10319 | 10 | Black Walnut (Juglans nigra) | Large open scars, OK | 2+ | Permitted Buildings and Driveways | B | 0 |
| 10320 | 16 | Black Walnut (Juglans nigra) | Broken limbs, open scars, some lean, OK | 2+ | Permitted Buildings and Driveways | B | 0 |
| 10321 | 15 | Black Walnut (Juglans nigra) | Open scars, OK | 2 | Permitted Buildings and Driveways | B | 0 |
| 10322 | 19 | Black Walnut (Juglans nigra) | Scars, slight lean, OK | 1 | Permitted Buildings and Driveways | B | 0 |
| 10323 | 17 | Black Walnut (Juglans nigra) | Scars, OK | 2 | Permitted Buildings and Driveways | B | 0 |
| 10324 | 5 | Bitter cherry (Prunus emarginata) | OK | 1 | Preserve | B | 1 |
| 10325 | 5 | Bitter cherry (Prunus emarginata) | Codominate, broken limbs, scars, deformed branch attachment, OK | 2 | Permitted Buildings and Driveways | B | 0 |
| 10326 | 11 | Black cottonwood (Populus trichocarpa) | Entangled bitats, OK | 2 | Permitted Buildings and Driveways | B | 0 |
| 10327 | 5 | Black cottonwood (Populus trichocarpa) | Codominate, included bark... ok | 2+ | Permitted Buildings and Driveways | B | 0 |
| 10328 | 14 | Willow Spp. (Salix Spp.) | Some lean, hangs over fence, OK | 2 | Permitted Buildings and Driveways | B | 0 |
| 10329 | 23 | Black Walnut (Juglans nigra) | Large scar, decay, butt swell, OK | 2+ | Permitted Buildings and Driveways | A | 0 |
| 10330 | 16 | Black Walnut (Juglans nigra) | Scars, OK | 2 | Permitted Buildings and Driveways | B | 0 |
| 10331 | 16 | Black Walnut (Juglans nigra) | Scars, OK | 2 | Permitted Buildings and Driveways | B | 0 |
| 10332 | 9 | Black Walnut (Juglans nigra) | Codominate, scars, OK | 2 | Permitted Buildings and Driveways | B | 0 |
| 25975 | 60 | Douglas-Fir | Some sweep, broken limbs, OK | 2 | Offsite / Preserve | | 1 |
| 26006 | 10 | Black Walnut (Juglans nigra) | Declining, thinning crown, many dead branches | | Offsite / Preserve | | 1 |
| 26384 | 14 | Black Walnut (Juglans nigra) | Codominate, scars, entangled bitats | 2 | Offsite / Preserve | B | 1 |
| 26385 | 12 | Black Walnut (Juglans nigra) | Large scars, some decay, OK | 2 | Offsite / Preserve | B | 1 |
| 26390 | 14 | Black Walnut (Juglans nigra) | Scars, hanging limb should be removed | 2+ | Offsite / Preserve | B | 1 |
| 26391 | 14 | Black Walnut (Juglans nigra) | Codominate, slight lean, OK | 2 | Offsite / Preserve | B | 1 |
| 26393 | 14 | Black Walnut (Juglans nigra) | Entangled bitats, OK | 2 | Offsite / Preserve | B | 1 |
| 26394 | 12 | California black oak (Quercus Kellogg) | Some lean, OK | 2 | Offsite / Preserve | B | 1 |
| 26419 | 22 | Bitter cherry (Prunus emarginata) | OK | 2 | Offsite / Preserve | B | 1 |
| 26410 | 12 | Black Walnut (Juglans nigra) | Scars, oversize limb may need to be removed | 2+ | Offsite / Preserve | B | 1 |
| 26402 | 13 | Black Walnut (Juglans nigra) | Many large scars, decay, watch | 3 | Offsite / Preserve | A | 1 |
| 26412 | 12 | Black Walnut (Juglans nigra) | Broken limbs, codominant, OK | 2+ | Offsite / Preserve | B | 1 |
| 26403 | 11 | Black Walnut (Juglans nigra) | Entangled bitats, OK | 2 | Offsite / Preserve | B | 1 |
| 26409 | 13 | California black oak (Quercus Kellogg) | Codominant, broken stems, dead limbs, OK | 2+ | Offsite / Preserve | B | 1 |
| 26411 | 10 | Cherry spp. (Prunus Spp.) | Multiple stems, drooping limbs, OK | 2+ | Offsite / Preserve | B | 1 |
| 26412 | 10 | Black Walnut (Juglans nigra) | Broken limbs, codominant, OK | 2+ | Offsite / Preserve | B | 1 |
| Totals | 471 | | | | | | 17 |
| | | Total # of Existing On-site Trees= | 16 | | Total Existing On-site DBH (inches)= | | 212.0 |
| | | Total # of Hazard Trees= | 0 | | Total Existing On-site DBH Retained (inches)= | | 5 |

**NOTE:**

*HAZARD RATING: 1 = LOW RISK
2 = MODERATE RISK
3 = HIGH RISK
4 = EXTREME RISK

**WINDTHROW RATING: A = LEAST WINDTHROW RESISTANT
B = MODERATE WINDTHROW RESISTANT
C = MOST WINDTHROW RESISTANT

***SAVE/REMOVE: 1 = SAVE
0 = REMOVE

SEE DETAILED TREE INVENTORY – FOR INDIVIDUAL TREE INFORMATION
TREES SHOWN TO BE SAVED THAT THE PROJECT ARBORIST DETERMINES NEED TO BE REMOVED DURING CONSTRUCTION WILL BE MITIGATED PER CITY REQUIREMENTS.

ARBORIST DISCLOSURE STATEMENT

ARBORISTS ARE TREE SPECIALISTS WHO USE THEIR EDUCATION, KNOWLEDGE, TRAINING, AND EXPERIENCE TO EXAMINE TREES, RECOMMEND MEASURES TO ENHANCE THE HEALTH OF TREES, AND ATTEMPT TO REDUCE THE RISK OF LIVING NEAR TREES. THE CLIENT AND JURISDICTION MAY CHOOSE TO ACCEPT OR DISREGARD THE RECOMMENDATIONS OF THE ARBORIST, OR SEEK ADDITIONAL ADVICE.

ARBORISTS CANNOT DETECT EVERY CONDITION THAT COULD POSSIBLY LEAD TO THE STRUCTURAL FAILURE OF A TREE. TREES ARE LIVING ORGANISMS THAT FAIL IN WAYS WE DO NOT FULLY UNDERSTAND. CONDITIONS ARE OFTEN HIDDEN WITHIN TREES AND BELOW GROUND. ARBORISTS CANNOT GUARANTEE THAT A TREE WILL BE HEALTHY OR SAFE UNDER ALL CIRCUMSTANCES, OR FOR A SPECIFIED PERIOD OF TIME. LIKEWISE, REMEDIAL TREATMENTS, LIKE MEDICINE, CANNOT BE GUARANTEED.

TREES CAN BE MANAGED, BUT THEY CANNOT BE CONTROLLED. TO LIVE NEAR TREES IS TO ACCEPT SOME DEGREE OF RISK. THE ONLY WAY TO ELIMINATE ALL RISK ASSOCIATED WITH TREES IS TO ELIMINATE ALL TREES.

AT THE COMPLETION OF CONSTRUCTION, ALL TREES MUST ONCE AGAIN BE REVIEWED TO EVALUATE THEIR HAZARD RATING.. LAND CLEARING AND REMOVAL OF ADJACENT TREES CAN EXPOSE PREVISOULY UNSEEN DEFECTS AND OTHERWISE HEALTHY TREES CAN BE DAMAGED DURING CONSTRUCTION.

TREE INFORMATION GATHERED UNDER THE SUPERVISION OF BRANDT THISSELL, CERTIFIED ARBORIST, WITH AKS ENGINEERING AND FORESTRY, LLC.

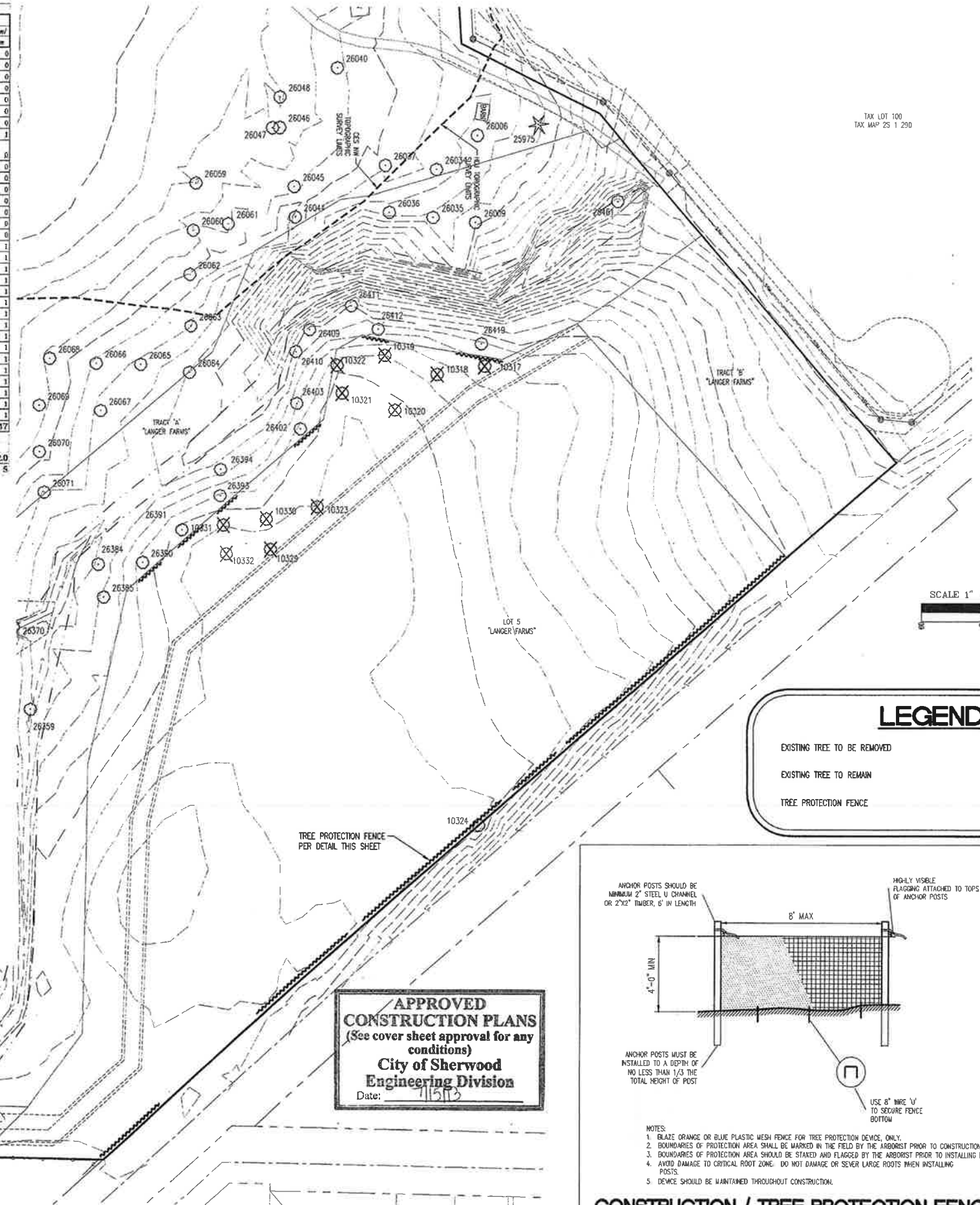


## LEGEND

EXISTING TREE TO BE REMOVED

EXISTING TREE TO REMAIN

TREE PROTECTION FENCE

APPROVED
CONSTRUCTION PLANS
(See cover sheet approval for any conditions)
City of Sherwood
Engineering Division
Date: 7/15/13

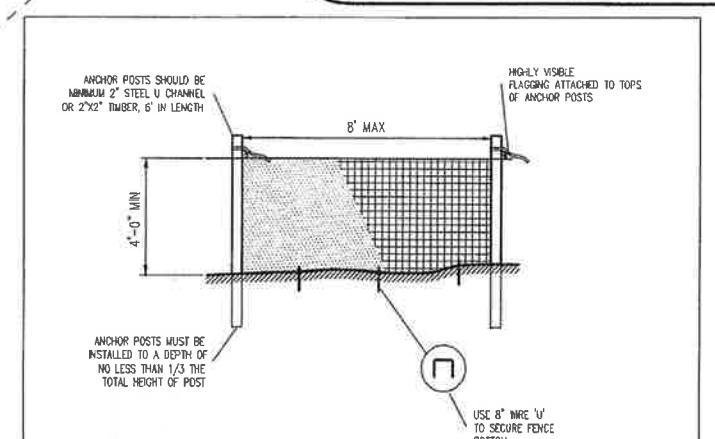


NOTES:
1. BLAZE ORANGE OR BLUE PLASTIC MESH FENCE FOR TREE PROTECTION DEVICE, ONLY.
2. BOUNDARIES OF PROTECTION AREA SHALL BE MARKED IN THE FIELD BY THE ARBORIST PRIOR TO CONSTRUCTION
3. BOUNDARIES OF PROTECTION AREA SHOULD BE STAKED AND FLAGGED BY THE ARBORIST PRIOR TO INSTALLING DEVICES
4. AVOID DAMAGE TO CRITICAL ROOT ZONE. DO NOT DAMAGE OR SEVER LARGE ROOTS WHEN INSTALLING POSTS.
5. DEVICE SHOULD BE MAINTAINED THROUGHOUT CONSTRUCTION.

## CONSTRUCTION / TREE PROTECTION FENCE

CERTIFIED ARBORIST

BRANDT D. THISSELL
CERTIFICATE NUMBER: PN-7391A
EXPIRATION DATE: 06/30/15

# TREE PRESERVATION AND REMOVAL PLAN

**PERMIT SET**

**SENTINEL SELF STORAGE ANNEX**
**SHERWOOD OREGON**
WASHINGTON COUNTY TAX MAP 2S 1 29D
TAX LOT 300


AKS ENGINEERING & FORESTRY
ENGINEERING · PLANNING
SURVEYING · FORESTRY
13910 SW GALBREATH DR., SUITE 100
SHERWOOD, OR 97140
PHONE: (503) 925-8799
FAX: (503) 925-8889


| | |
|---|---|
| DESIGNED BY: | AHH |
| DRAWN BY: | MTS |
| CHECKED BY: | JPC |
| DRAWING NO: | E2-C030 |
| SCALE: | AS NOTED |

PREPARED FOR:
LANGER FAMILY, LLC.
15705 SW TUALATIN-SHERWOOD RD
SHERWOOD, OR 97140

DATE: 06/21/13

JOB NUMBER
2929

SHEET
C030

## GRADING NOTES

1. THE CONTRACTOR SHALL BE RESPONSIBLE FOR MAKING THE NECESSARY ARRANGEMENTS FOR COMPACTION TESTING WITH THE PROJECT GEOTECHNICAL ENGINEER AND FOR SUPPLYING THE RESULTS TO THE PROJECT ENGINEER.
2. SITE PREPARATION MUST INCLUDE THE REMOVAL OF VEGETATION, NON-COMPLYING FILL, TOPSOIL, OR OTHER UNSUITABLE MATERIAL PRIOR TO PLACEMENT OF THE FILL.
3. NO CUT OR FILL SHALL EXCEED A GRADE OF 2 HORIZONTAL TO 1 VERTICAL UNLESS APPROVED BEFOREHAND BY THE GEOTECHNICAL ENGINEER, PROJECT ENGINEER, AND JURISDICTION.
4. APPROPRIATE BENCHING OF FILLS IS REQUIRED FOR FILLS OVER 5 FEET IN HEIGHT ON SLOPES IN EXCESS OF 5 HORIZONTAL TO 1 VERTICAL. BENCHING MUST BE DONE PER THE GEOTECHNICAL ENGINEER'S RECOMMENDATIONS.
5. CUT AND FILL SLOPES SHALL BE PROTECTED FROM EROSION. SUCH PROTECTION MAY CONSIST OF APPROPRIATE REVEGETATION OR OTHER ACCEPTABLE MEANS AND METHODS. EROSION CONTROL MEASURES SHALL BE IN PLACE PRIOR TO EARTHWORK OR SITE STRIPPING.
6. THE CONTRACTOR SHALL COORDINATE WITH THE PROJECT ENGINEER AND THE PROJECT GEOTECHNICAL ENGINEER FOR REQUIRED INSPECTIONS AT THE FOLLOWING STAGES OF CONSTRUCTION OR AS OTHERWISE DIRECTED BY THE GEOTECHNICAL ENGINEER:
   - A. INSPECTION OF SITE STRIPPING, BUT PRIOR TO FILL PLACEMENT. EROSION CONTROL MEASURES SHALL BE IN PLACE AT THIS TIME.
   - B. IN PREPARATION OF BENCH CONSTRUCTION PRIOR TO FILL PLACEMENT.
   - C. AFTER PLACEMENT OF EACH 500 YARDS OF FILL.
   - D. AFTER THE MAJORITY OF FILL HAS BEEN PLACED AND IS IN "ROUGH" GRADE BUT PRIOR TO FINAL GRADING.
   - E. WHEN FINAL GRADING IS COMPLETED.
   - F. DURING FINAL GRADING, BUT PRIOR TO BASE ROCK AND PAVEMENT CONSTRUCTION.
7. PROJECT GRADING LIMITS SHALL BE WITHIN THE PROJECT'S PROPERTY BOUNDARY AND/OR STREET RIGHT-OF-WAY, UNLESS OTHERWISE SHOWN ON PLANS.
8. THE IDENTIFICATION OR REMOVAL OF UNSUITABLE MATERIAL SHALL BE DONE WITH CONSULTATION WITH THE PROJECT GEOTECHNICAL ENGINEER.
9. REMOVE AND DISPOSE OF ALL ORGANIC AND/OR UNSUITABLE MATERIALS, INCLUDING TREES, STUMPS, ROOTS, BRUSH, AND GRASS IN SUCH A MANNER TO MEET ALL APPLICABLE REGULATIONS. ON-SITE DISPOSAL SHALL BE AS DETERMINED BY THE PROJECT GEOTECHNICAL ENGINEER.
10. STRAIGHT GRADES SHALL BE RUN BETWEEN FINISH GRADE AND/OR FINISH CONTOUR LINES SHOWN, UNLESS OTHERWISE NOTED. FINISH GRADES ARE TO DRAIN AS INDICATED ON THE PLANS. ROUGH GRADING SHALL BE FINISHED BY BLADING AND RAKING TO REASONABLE SMOOTH CONTOURS WITH GENTLE TRANSITIONS.
11. MATERIAL IN SOFT SPOTS WITHIN PROPOSED BUILDING, PAVED OR SIDEWALK AREAS SHALL BE REMOVED TO THE DEPTH REQUIRED (AS DIRECTED BY THE PROJECT GEOTECHNICAL ENGINEER) TO PROVIDE A FIRM FOUNDATION AND SHALL BE REPLACED WITH SUITABLE BACKFILL. FILLS TO BE CONSTRUCTED IN HORIZONTAL LIFTS NOT TO EXCEED 8 INCHES LOOSE MEASURE.
12. COMPACTION TESTS AND REPORTS SHALL BE CONDUCTED BY AN APPROVED TESTING LABORATORY, TEST FREQUENCY SHALL BE PER THE PROJECT GEOTECHNICAL ENGINEER. TESTING TO COMMENCE WITH FILL ACTIVITIES AND AS A MINIMUM, ONE TEST SHALL BE TAKEN FOR EVERY 500 CUBIC YARDS PLACED OR 2 VERTICAL FEET, WHICHEVER IS LESS.
13. FINISHED GRADE CONTOURS SHOWN ARE APPROXIMATE FINAL GRADE ELEVATIONS.
14. IF SPRINGS OR GROUNDWATER ARE ENCOUNTERED DURING CONSTRUCTION, THE CONTRACTOR SHALL NOTIFY THE PROJECT GEOTECHNICAL ENGINEER AND PROJECT ENGINEER OF THE CONDITIONS FOUND AND COORDINATE HIS ACTIVITIES IN A MANNER THAT WILL ALLOW TIME TO REVIEW THE SITUATION AND PREPARE A PLAN TO PROPERLY MITIGATE THE WATER ENCOUNTERED.
15. ALL CUT AND FILL AREAS SHALL BE STRIPPED OF SOD AND OTHER NON-STRUCTURAL MATERIAL (DEPTH TO BE DETERMINED BY PROJECT GEOTECHNICAL ENGINEER).
16. ALL GRADING SHALL BE IN CONFORMANCE WITH CHAPTER 33 OF THE CURRENT UNIFORM BUILDING CODE (UBC).
17. ALL STRUCTURAL FILL SHALL MEET THE REQUIREMENTS OF THE PROJECT GEOTECHNICAL ENGINEER, AND THE JURISDICTION.
18. THESE PLANS AND SPECIFICATIONS ASSUME "DRY WEATHER" CONSTRUCTION. ADDITIONAL MEASURES MAY BE REQUIRED BY PROJECT GEOTECHNICAL ENGINEER FOR "WET WEATHER" CONSTRUCTION.
19. **ALL CONSTRUCTION SHALL BE IN CONFORMANCE WITH THE RECOMMENDATIONS OF THE PROJECT GEOTECHNICAL ENGINEER AS OUTLINED IN THE REPORT PREPARED BY GEOPACIFIC ENGINEERING, INC. DATED NOVEMBER 20, 2012.**
20. **CONTRACTOR IS RESPONSIBLE FOR HAUL-OFF AND DISPOSAL OF ALL EXCESS FILL MATERIAL, INCLUDING OBTAINING ANY ASSOCIATED PERMITS.**




1 GRADE TRANSITION AT FOUNDATION STEP
SCALE: NTS

**NOTES:**

1. SEE THE "LANGER FARMS/SENTINEL SELF STORAGE ANNEX" 1200-C PLANS FOR EROSION AND SEDIMENT CONTROL MEASURES. CITY GRADING PERMIT REQUIRED FOR ON-SITE GRADING OF PARCEL.
2. SEE 12"x12" FOOTING WITH SLOPED EDGE DETAIL PER THE SENTINEL SELF STORAGE ANNEX PLANS BY MAKO STRUCTURES, INC. FOR REFERENCE LOCATION OF FINISHED FLOOR SLAB ELEVATIONS AT ENCLOSED UNITS.

**KEY NOTES:**

1. TRANSITION AC PAVEMENT AT FOUNDATION STEP PER DETAIL THIS SHEET.

**ABBREVIATIONS:**

TC: TOP OF CURB ELEVATION. CURB HEIGHT 6" HIGHER THAN ADJACENT AC UNLESS OTHERWISE NOTED.

AC: TOP OF ASPHALT ELEVATION

FFE: FINISHED FLOOR ELEVATION

PAD: TOP OF CONCRETE PAD

——>—— AC VALLEY LINE

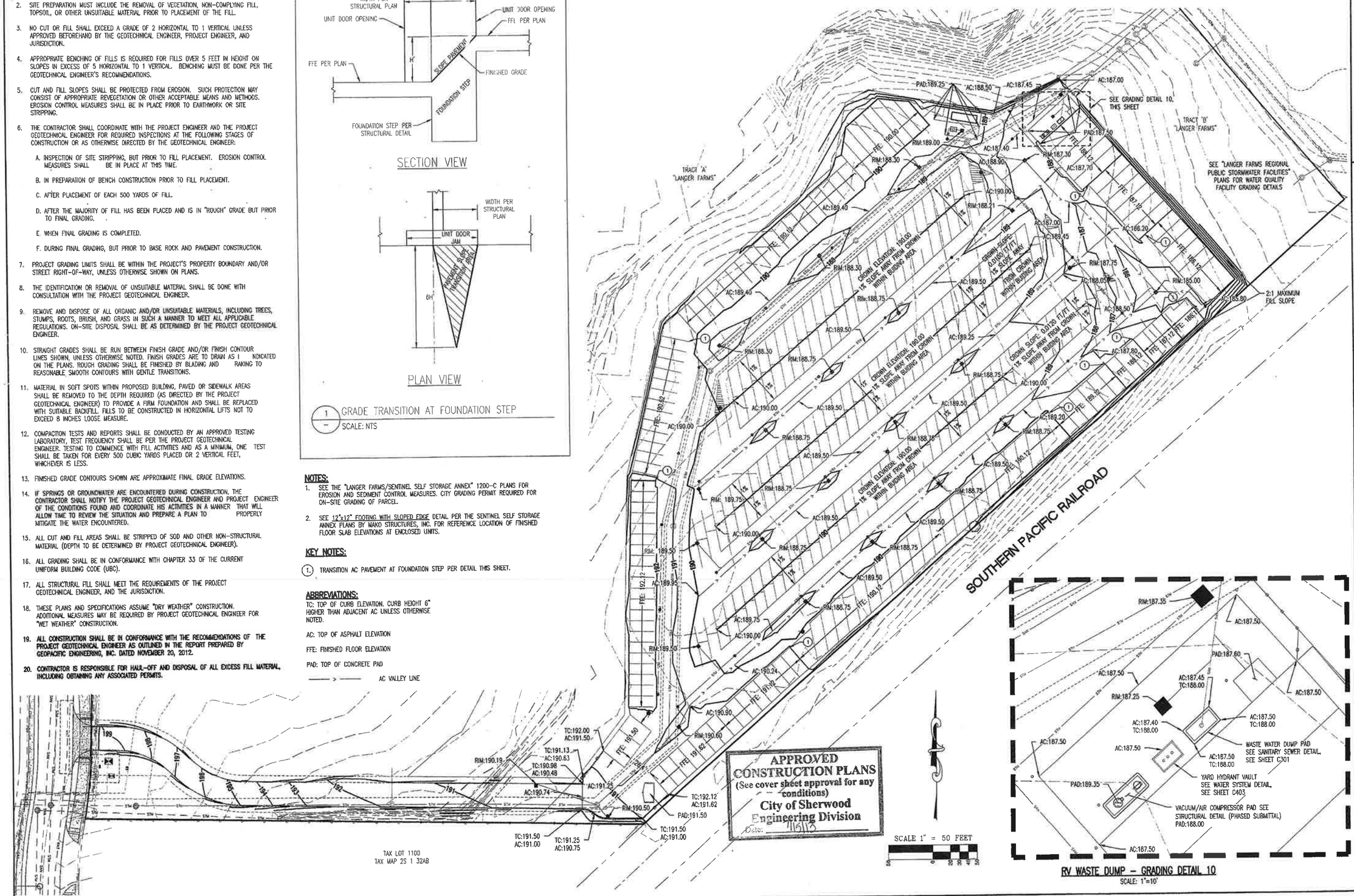


APPROVED CONSTRUCTION PLANS
(See cover sheet approval for any conditions)
City of Sherwood
Engineering Division
Date: 7/15/13




RV WASTE DUMP – GRADING DETAIL 10
SCALE: 1"=10'

# GRADING PLAN

**PERMIT SET**
**SENTINEL SELF STORAGE ANNEX**
**SHERWOOD OREGON**
TAX LOT 300
WASHINGTON COUNTY TAX MAP 2S 1 29D


AKS ENGINEERING & FORESTRY
ENGINEERING · PLANNING
SURVEYING · FORESTRY
13910 SW GALBREATH DR., SUITE 100
SHERWOOD, OR 97140
PHONE: (503) 925-8799
FAX: (503) 925-8969


| | |
|---|---|
| DESIGNED BY: | AHH |
| DRAWN BY: | MTS |
| CHECKED BY: | JPC |
| DRAWING NO.: | E2-C070 |
| SCALE: | AS NOTED |

PREPARED FOR:
LANGER FAMILY, LLC.
15705 SW TUALATIN-SHERWOOD RD
SHERWOOD, OR 97140

DATE: 06/21/13

REGISTERED PROFESSIONAL ENGINEER 56939PE OREGON JANUARY 18, 2012 ALEXANDER H. HURLEY
RENEWAL DATE: 6/30/15

JOB NUMBER
2929

SHEET
C070

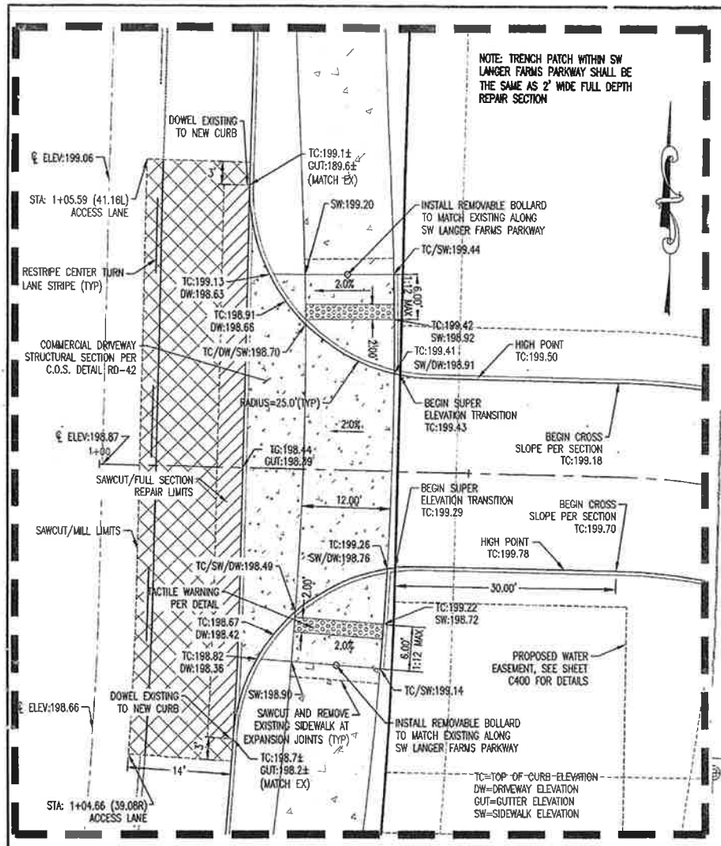


## COMMERCIAL DRIVEWAY DROP ELEVATION DETAIL

SCALE: 1"=10'

2" GRIND AND OVERLAY W/ LEVEL 3, 1/2" DENSE GRADED HMAC. RESTRIPE MEDIAN TO MATCH EXISTING W/ THERMOPLASTIC YELLOW W/ REFLECTIVE BEADS

3.5' WIDE FULL DEPTH REPAIR (2'AC+1.5'GUTTER FROM FACE OF CURB)
2" LEVEL 3, 1/2" DENSE GRADED HMAC*
OVER 5" LEVEL 3, 3/4" DENSE GRADED HMAC (PLACED IN TWO LIFTS)
OVER 14" 3/4"-0 CRUSHED ROCK

*GRIND TOP 2" AC OFF 2' WIDE ZONE W/ FINAL GRIND AND OVERLAY.

NOTES:
1. ASPHALT CEMENT TO BE PG 70-22 PERFORMANCE GRADED ASPHALT.
2. CITY INSPECTOR SHALL INSPECT 2' WIDE ZONE PRIOR TO PLACING ASPHALT
3. FINAL 2" LIFT TO BE ONE SEAMLESS LAYER ACROSS GRIND AND OVERLAY AND FULL DEPTH REPAIR ZONES
4. DRIVEWAY TO MATCH EXISTING COMMERCIAL DRIVEWAYS ON SW LANGER FARMS PARKWAY.

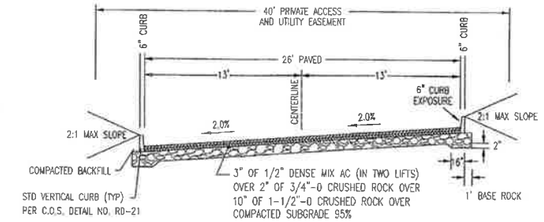


## TYPICAL ACCESS DRIVEWAY SECTION

NOT TO SCALE

NOTE:
1. FOR COMPACTION REQUIREMENTS, SEE GEOTECHNICAL ENGINEERING REPORT BY GEOPACIFIC ENGINEERING INC DATED NOVEMBER 20, 2012.
2. CITY INSPECTOR TO WITNESS PROOFROLL OF THE SUBGRADE AND/OR BASEROCK PRIOR TO PAVING THROUGH TO WATER QUALITY FACILITY.

SCALE 1" = 30 FEET

| ACCESS LANE | | | |
|---|---|---|---|
| NUMBER | RADIUS | LENGTH | LINE/CHORD BEARING |
| L1 | | 68.96 | S88° 52' 09.41"E |
| C1 | 100.00 | 73.82 | S67° 43' 18.63"E |
| L2 | | 11.52 | S46° 34' 27.86"E |
| C2 | 100.00 | 73.82 | S67° 43' 18.63"E |
| L3 | | 394.29 | S88° 52' 09.41"E |

APPROVED
CONSTRUCTION PLANS
(See cover sheet approval for any conditions)
City of Sherwood
Engineering Division
Date: 7/18/13

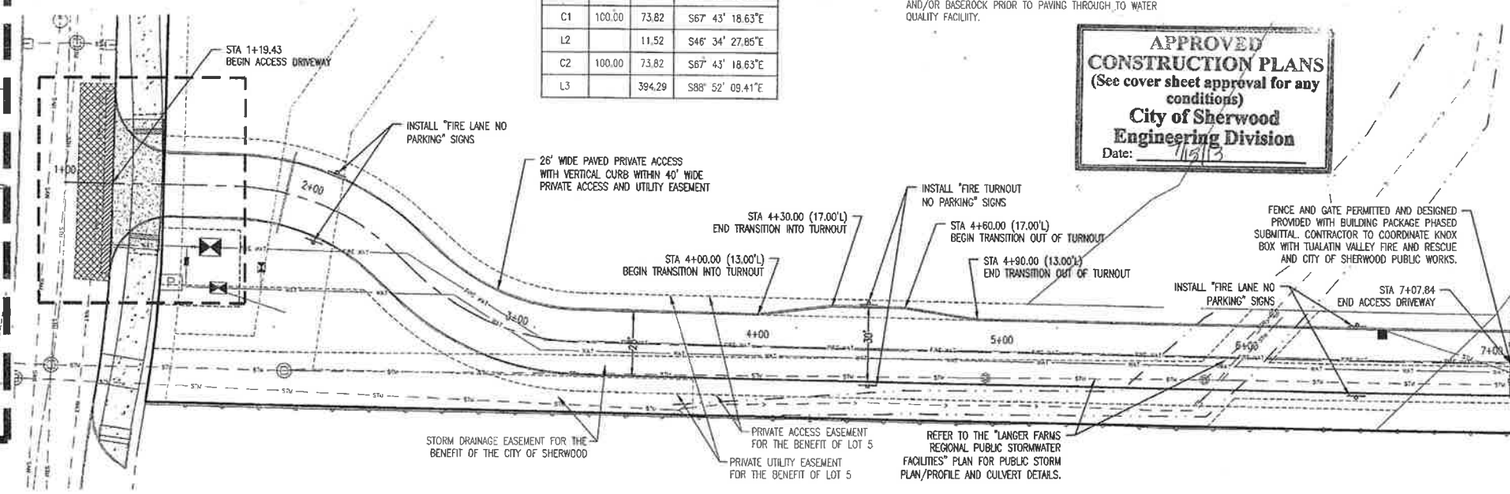


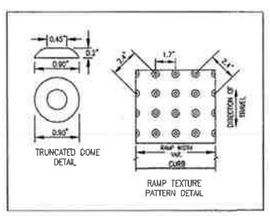


## TACTILE WARNING DETAIL

NOT TO SCALE

NOTES:
HOT MIX ASPHALT CONCRETE (HMAC) PLACEMENT
1. ALL COMPACTION PER GEOTECH REPORT PREPARED BY GEOPACIFIC ENGINEERING, INC. DATED NOVEMBER 20, 2012.
2. THE PLACING OF ASPHALT CONCRETE WILL BE PERMITTED ONLY DURING DRY WEATHER AND WHEN THE AMBIENT TEMPERATURE IS RISING AND IS EQUAL TO OR GREATER THAN SHOWN IN THE TABLE OF MINIMUM AMBIENT TEMPERATURES.
3. ASPHALT CONCRETE SHALL BE PLACED ON A DRY PREPARED SURFACE.
4. TACK COAT SHALL BE APPLIED AGAINST FACE EDGE OF CURB & AROUND MANHOLE CASTING & OTHER EXPOSED STRUCTURES BEFORE PAVING.
5. ASPHALT EDGES, AFTER ASPHALT CONCRETE HAS BEEN PLACED, SHALL BE SAND SEALED.
6. ADDITIONAL MEASURES MAY BE NECESSARY (AS DETERMINED BY PROJECT GEOTECHNICAL ENGINEER) IF CONSTRUCTION OCCURS DURING WET WEATHER.
7. NO PONDING OF WATER IS ACCEPTABLE ON THE FINISHED AC.

## MINIMUM AMBIENT TEMPERATURES

| NOMINAL SPECIFIED COMPACTED THICKNESS OF INDIVIDUAL COURSES | WEARING COURSES | ALL OTHER COURSES |
|---|---|---|
| LESS THAN 1-1/2" | 60 DEGREES (F) | 60 DEGREES (F) |
| 1-1/2" TO 2" | 50 DEGREES (F) | 50 DEGREES (F) |
| 2" AND OVER | 40 DEGREES (F) | 40 DEGREES (F) |

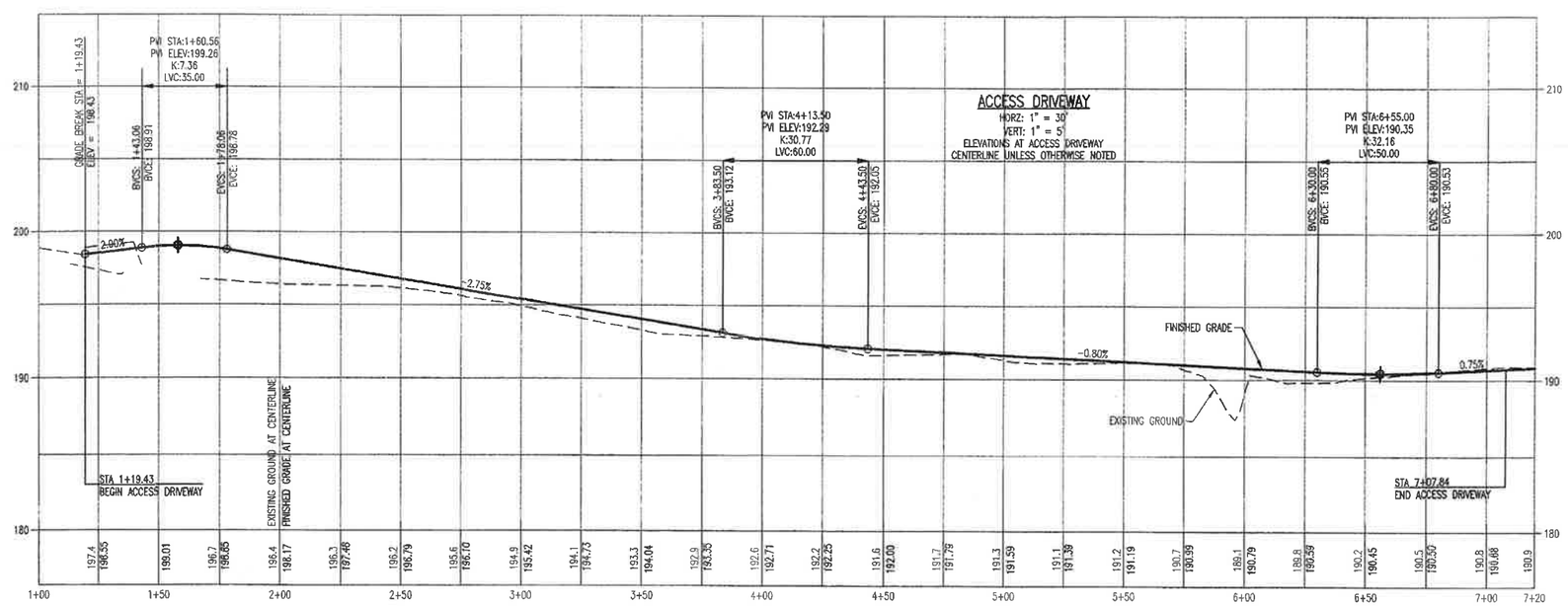


# ACCESS DRIVEWAY PLAN, PROFILE, AND SECTION

PERMIT SET

SENTINEL SELF STORAGE ANNEX
SHERWOOD
TAX LOT 300

OREGON
WASHINGTON COUNTY TAX MAP 2S 1 29D

AKS ENGINEERING & FORESTRY
ENGINEERING · PLANNING
SURVEYING · FORESTRY
13910 SW GALBREATH DR., SUITE 100
SHERWOOD, OR 97140
PHONE: (503) 925-8799
FAX: (503) 925-8869

| | |
|---|---|
| DESIGNED BY: | AHH |
| DRAWN BY: | MTS |
| CHECKED BY: | JPC |
| DRAWING NO.: | E2-C100 |
| SCALE: | AS NOTED |

PREPARED FOR:
LANGER FAMILY, LLC.
15705 SW TUALATIN-SHERWOOD RD
SHERWOOD, OR 97140

DATE: 06/21/13

REGISTERED PROFESSIONAL ENGINEER 56899PE OREGON JANUARY 13, 2003 ALEXANDER H. HURLEY
RENEWAL DATE: 6/30/15

JOB NUMBER
2929

SHEET
C100

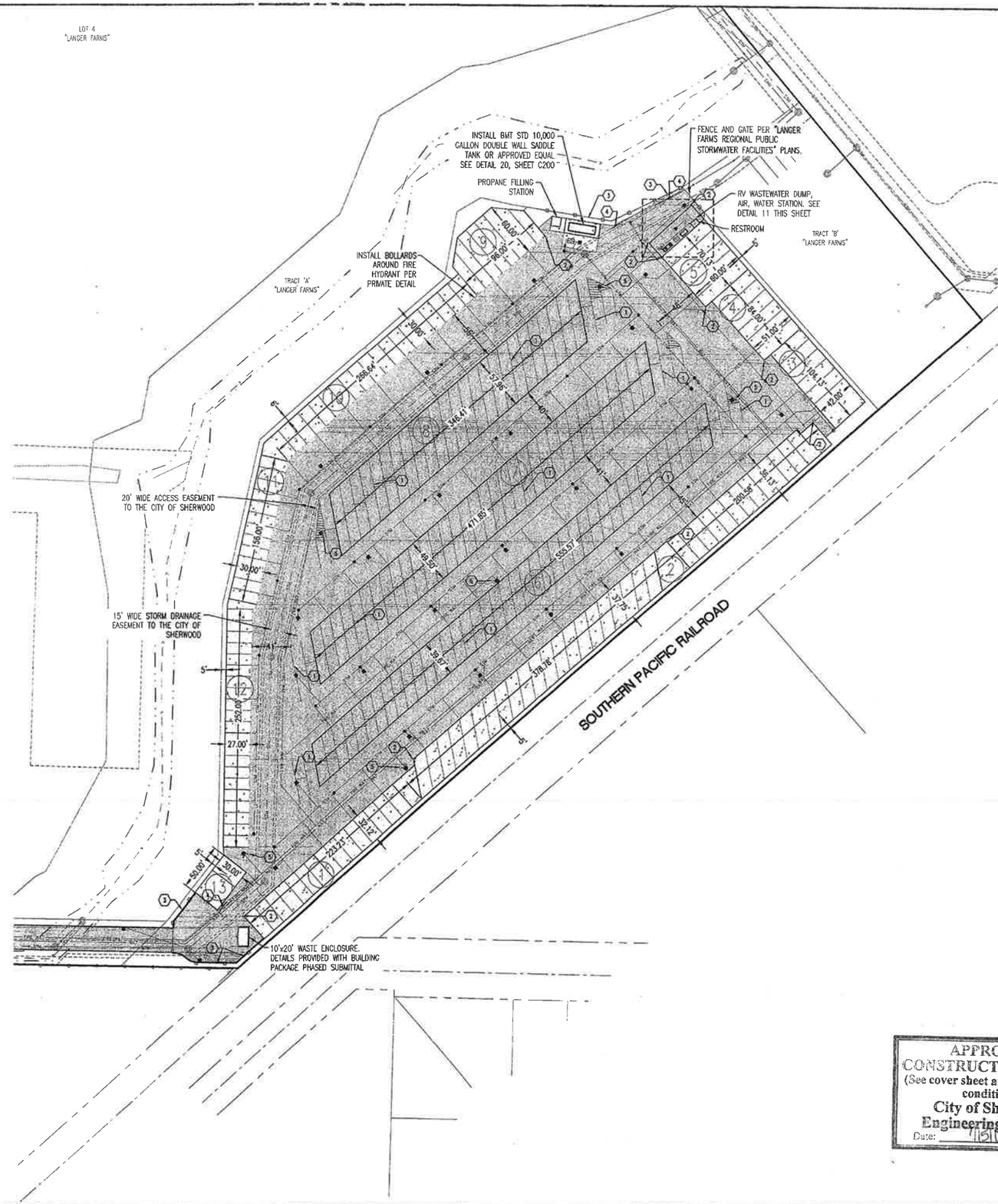


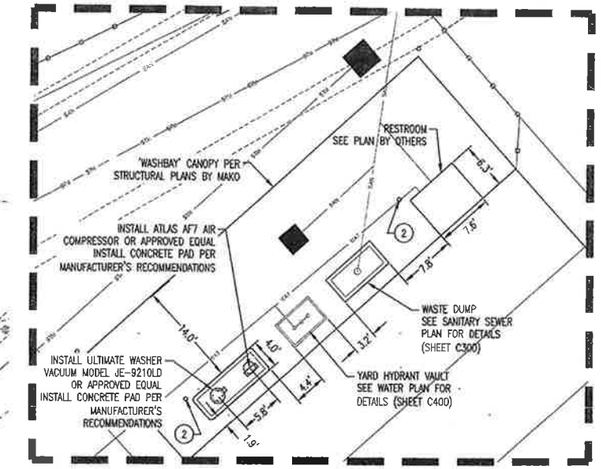


## RV WASTE DUMP DETAIL 11

SCALE: 1"=10'

## LEGEND

CONCRETE PAD PER PLANS BY OTHERS

AC PAVEMENT

NOTES:

1. FOR AREAS WITHIN BUILDING FOOTPRINT, SEE SENTINEL SELF STORAGE ANNEX PLANS BY MAKO STRUCTURAL, INC. (PHASED SUBMITTAL)
2. MAXIMUM BUILDING HEIGHT = 21-FT SEE MAKO STRUCTURAL PLANS FOR ADDITIONAL INFORMATION

(#) BUILDING NUMBER. SEE MAKO STRUCTURAL PLANS

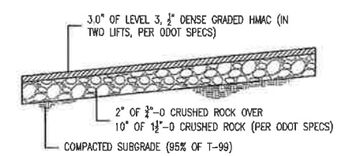


## TYPICAL AC PAVEMENT SECTION

NTS

NOTES:
STRUCTURAL SECTION TO BE CONSTRUCTED IN ACCORDANCE WITH THE RECOMMENDATIONS OF THE PROJECT'S GEOTECHNICAL ENGINEER.

FOR COMPACTION REQUIREMENTS, SEE GEOTECHNICAL ENGINEERING REPORT BY GEOPACIFIC ENGINEERING INC DATED NOVEMBER 20, 2012

CITY INSPECTOR TO VISUALLY INSPECT WATER QUALITY FACILITY ACCESS PRIOR TO PAVING AND MAY REQUIRE PROOF ROLL

KEYNOTES: (#)

1 INSTALL 4" WHITE PAINTED STRIPE. (TYP)

2 INSTALL 4" PERMANENT BOLLARD PER DETAIL.

3 INSTALL SIGHT OBSCURING SECURITY FENCE. DETAIL PROVIDED IN PHASED SUBMITTAL.

4 INSTALL "NO PARKING" SIGNS.

5 INSTALL 4" PERMANENT BOLLARD PER SHEET C400.

APPROVED
CONSTRUCTION PLANS
(See cover sheet approval for any conditions)
City of Sherwood
Engineering Division
Date: 7/15/13

# SITE PLAN

PERMIT SET

SENTINEL SELF STORAGE ANNEX
SHERWOOD
TAX LOT 300

OREGON
WASHINGTON COUNTY TAX MAP 2S 1 29D

AKS ENGINEERING & FORESTRY
ENGINEERING · PLANNING
SURVEYING · FORESTRY
13910 SW GALBREATH DR., SUITE 100
SHERWOOD, OR 97140
PHONE: (503) 925-8799
FAX: (503) 925-8969

| | |
|---|---|
| DESIGNED BY: | AHH |
| DRAWN BY: | MTS |
| CHECKED BY: | JPC |
| DRAWING NO.: | E2-C100 |
| SCALE: | AS NOTED |

PREPARED FOR:
LANGER FAMILY, LLC.
15705 SW TUALATIN-SHERWOOD RD
SHERWOOD, OR 97140

DATE: 06/21/13

REGISTERED PROFESSIONAL ENGINEER
OREGON
JANUARY 15, 2013
ALEXANDER H. HURLEY
RENEWAL DATE: 6/30/15

JOB NUMBER
2929

SHEET
C101

# PUBLIC STREET DETAILS

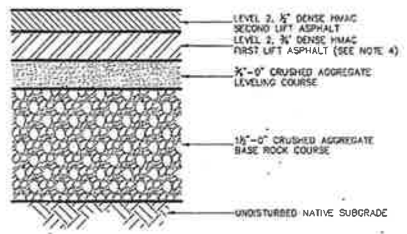


**PAVEMENT SECTION CHART**
**COMPONENT THICKNESS (INCHES)**

| FUNCTIONAL CLASSIFICATION | SECOND LIFT HMAC THICKNESS | FIRST LIFT HMAC THICKNESS | LEVELING COURSE THICKNESS | BASE ROCK COURSE THICKNESS | GEOTEXTILE FABRIC REQUIRED |
|---|---|---|---|---|---|
| LOCAL | 2" | 2" | 2" | 6" | YES |
| NEIGHBORHOOD | 2" | 2" | 2" | 9" | YES |
| COMMERCIAL | 2" | 3" | 3" | 9" | YES |
| COLLECTOR | 2" | 3" | 3" | 9" | YES |
| ARTERIAL | 2" | 3" | 4" | 10" | YES |

NOTES:

1. MATERIALS AND PLACEMENT OF THE HOT MIXED ASPHALT CONCRETE (HMAC) SHALL CONFORM TO THE REQUIREMENTS DELINEATED IN SECTION 00744 – HOT MIXED ASPHALT CONCRETE (HMAC) PAVEMENT, OF THE ODOT/APWA, OREGON STANDARD SPECIFICATIONS FOR CONSTRUCTION (LATEST EDITION), EXCEPT AS MODIFIED BY CITY AND NOTED IN THE CITY'S ENGINEERING DESIGN AND STANDARD DETAILS MANUAL (LATEST EDITION).
2. THE TOP LIFT OF HMAC SHALL BE PLACED PRIOR TO CITY FINAL ACCEPTANCE OF PUBLIC INFRASTRUCTURE IMPROVEMENTS.
3. CRUSHED AGGREGATE USED FOR BASE ROCK AND LEVELING COURSE SHALL CONFORM TO THE REQUIREMENTS DELINEATED IN SECTION 02630 – BASE AGGREGATE, OF THE ODOT/APWA, OREGON STANDARD SPECIFICATIONS FOR CONSTRUCTION (LATEST EDITION).
4. LEVEL 2, ½" DENSE HMAC MAY BE USED IN-LIEU-OF LEVEL 2, ¾" DENSE HMAC FOR THE FIRST LIFT OF ASPHALT.

| City of Sherwood Oregon | STANDARD DRAWING TITLE | DRAWING NUMBER |
|---|---|---|
| | STANDARD RESIDENTIAL PAVEMENT SECTION | RD-20 |
| | SCALE | DATE |
| | N.T.S. | JUL'09 |

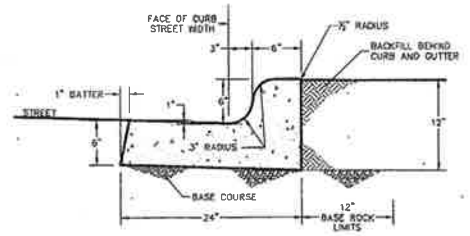


NOTES:

1. MONOLITHIC CURB AND GUTTER SHALL BE USED ON ALL NEW ROADWAY SECTIONS, EXCEPT AT ROADWAY MEDIANS AND AT MOUNTABLE CURB SECTIONS (SEE STD DET RD-21 & RD-24 FOR THESE CONDITIONS).
2. CONCRETE SHALL BE COMMERCIAL MIX, WITH A 28-DAY COMPRESSIVE STRENGTH OF 3300 PSI, WITH A SLUMP RANGE OF 1½" TO 3" MAX.
3. EXPANSION JOINTS TO BE PROVIDED AT EACH:
   - A. POINT OF TANGENCY.
   - B. COLD JOINT.
   - C. SIDE OF INLET STRUCTURES.
   - D. SIDE OF DRIVEWAYS.
4. EXPANSION JOINT MATERIAL SHALL BE PRE-MOLDED, ASPHALT IMPREGNATED, NON-EXTRUDING, WITH A THICKNESS OF ½".
5. CONTRACTION JOINTS SHALL HAVE:
   - A. SPACING OF NOT MORE THAN 15 FEET.
   - B. DEPTH OF JOINT OF AT LEAST 1½".
6. BASE ROCK SHALL BE ¾"-0", COMPACTED TO 95% OF MAXINUM DENSITY PER AASHTO T-180. BASE ROCK SHALL BE TO SUBGRADE OF STREET STRUCTURES OR 4", WHICHEVER IS GREATER, AND SHALL EXTEND 12" BEHIND CURB.
7. FOR CURB AND GUTTER REQUIREMENTS ON SHED AND SUPERELVATED ROAD SECTIONS, SEE STD DET RD-23.

| City of Sherwood Oregon | STANDARD DRAWING TITLE | DRAWING NUMBER |
|---|---|---|
| | STANDARD MONOLITHIC CURB AND GUTTER | RD-22 |
| | SCALE | DATE |
| | N.T.S. | JUL'09 |

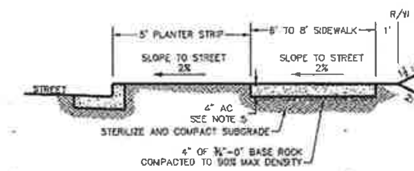


**SIDEWALK WITH PLANTER STRIP**
(FOR ALL NEW CONSTRUCTION)

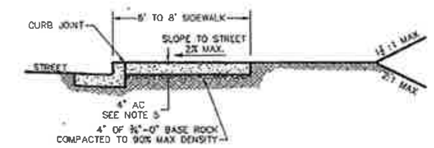


**CURB-TIGHT SIDEWALK**
(TO BE USED WITH VARIANCE ONLY)

NOTES:

1. CONCRETE SHALL BE COMMERCIAL MIX, MIN. COMPRESSIVE STRENGTH OF 3300 PSI @ 28 DAYS, WITH A SLUMP RANGE OF 1½" MIN. TO 3" MAX.
2. SIDEWALK PANELS TO BE SQUARE (5' LONG x 5' WIDE TYP.).
3. EXPANSION JOINTS TO BE PLACED AT SIDES OF DRIVEWAY APPROACHES, UTILITY VAULTS, CURB RAMPS, AND/OR POINTS OF TANGENCY IN CURB AS SHOWN ON THE STANDARD DRAWINGS FOR SIDEWALK RAMPS, AND AT SPACING NOT TO EXCEED 45'.
4. FOR SIDEWALKS ADJACENT TO THE CURB AND POURED AT THE SAME TIME AS THE CURB, THE JOINT BETWEEN THEM SHALL BE A TROWELED JOINT WITH A MINIMUM ½" RADIUS
5. SIDEWALKS SHALL HAVE A MINIMUM THICKNESS OF 4". IF MOUNTABLE CURB IS USED, OR IF SIDEWALK IS INTENDED AS PORTION OF A RESIDENTIAL DRIVEWAY IT SHALL HAVE A 6" MINIMUM THICKNESS, COMMERCIAL 8".
6. CONCRETE SHALL HAVE A BROOM FINISH, ALL JOINTS SHALL BE EDGED WITH 3" SHINE.
7. WIDTH OF PLANTER STRIP AND SIDEWALK IS MEASURED FROM FACE OF CURB.
8. IF DRAIN BLOCKOUTS IN CURBS ARE APPROVED, THEY SHALL BE EXTENDED PERPENDICULAR TO CURB TO 1' PAST BACK OF SIDEWALK WITH A 3" DIAMETER ADS PIPE. CONTRACTION JOINT SHALL BE PLACE OVER PIPE.

| City of Sherwood Oregon | STANDARD DRAWING TITLE | DRAWING NUMBER |
|---|---|---|
| | STANDARD SIDEWALK DETAIL | RD-26 |
| | SCALE | DATE |
| | N.T.S. | JUL'09 |

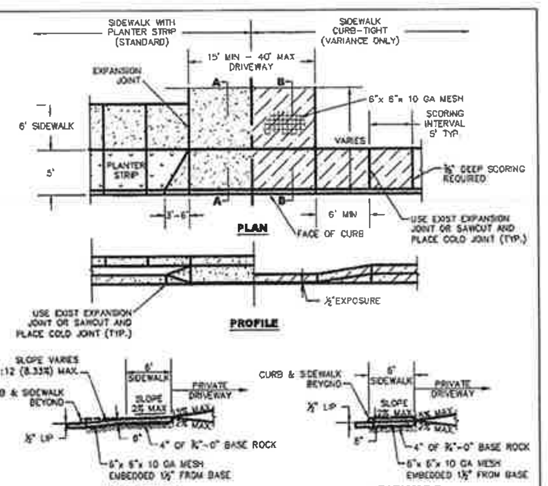


NOTES:

1. CONCRETE SHALL HAVE 8" MINIMUM DEPTH AND A COMPRESSIVE STRENGTH OF 4000 PSI @ 28 DAYS.
2. CURB JOINT SHALL BE A TROWELED JOINT WITH A MINIMUM ½" RADIUS ALONG BACK OF CURB.
3. EXPANSION JOINTS SHALL BE ½" PRE-MOLDED ASPHALT IMPREGNATED MATERIAL, CEDAR OR EQUIVALENT EXTENDING FROM TOP OF BASE TO FINISHED GRADE.
4. CONCRETE SHALL HAVE A BROOM FINISH AND EDGE ALL JOINTS.
5. WEEPHOLES ARE NOT TO BE PLACED IN WINGS.
6. IF CURBING IS BEING REMOVED TO INSTALL DRIVEWAY AND GUTTER SHOULD BECOME SEPARATED FROM THE DRIVING SURFACE IN EXCESS OF ¼", THEN THE GUTTER SHALL ALSO BE REMOVED AND REPLACED.
7. WINGS OF THE COMMERCIAL DRIVEWAY WHICH ARE A PORTION OF THE SIDEWALK SHALL NOT EXCEED A SLOPE OF 8.33% (1:12).
8. ODOT STANDARD DRAWINGS FOR COMMERCIAL DRIVEWAYS MAY BE USED WHEN PRE-APPROVED BY CITY ENGINEER.
9. SLOPE OF THE DRIVEWAY MAY BE AWAY FROM THE CURB WHEN PRE-APPROVED BY THE CITY ENGINEER.

| City of Sherwood Oregon | STANDARD DRAWING TITLE | DRAWING NUMBER |
|---|---|---|
| | STANDARD COMMERCIAL DRIVEWAY DETAIL | RD-42 |
| | SCALE | DATE |
| | N.T.S. | JUL'09 |

(FOR DRIVEWAY STRUCTURAL SECTION ONLY. GEOMETRY OF DRIVEWAY PER PLAN)

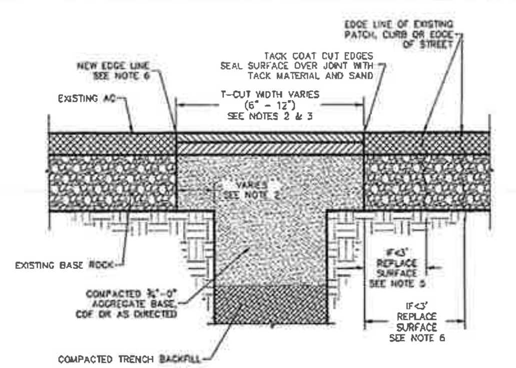


**CROSS-SECTION**

NOTES:

1. THIS DRAWING APPLIES TO TRENCH CUTS AND OTHER KINDS OF STREET CUTS.
2. SEE STD DET RD-20 FOR TYPICAL STREET PAVEMENT SECTION.
3. T-CUT ASPHALT 6" FOR TRENCHES 12" WIDE OR LESS, ELSE T-CUT IS 12" MINIMUM FOR TRENCHES WIDER THAN 12".
4. ON ALL NON-LOCAL STREETS, WIDTH OF T-CUT SHALL BE A MINIMUM OF 3'. ON ALL LOCAL STREETS, WIDTH OF T-CUT SHALL BE A MINIMUM OF 12" PLUS THE TRENCH WIDTH.
5. IF NEW EDGE OF PAVEMENT IS LESS THAN 3' FROM ANOTHER PATCH, CURB OR EDGE OF STREET, REPLACE THE PAVEMENT IN BETWEEN.
6. IF MORE THAN ONE EXISTING PATCH EDGE IS WITHIN THE 3' ZONE, REMOVE PAVEMENT TO THE FAR EDGE OF THE PRE-EXISTING PATCH.
7. NEW EDGE OF PAVEMENT (EDGE LINE) SHALL NOT LIE IN A WHEEL PATH. WIDTH OF T-CUT SHALL BE WIDENED WHERE NECESSARY TO MOVE THE EDGE LINE OUT OF THE WHEEL PATH AND EITHER: (A) TO LOCATION THAT IS 6" FROM THE NEAREST LINE OR (B) TO THE LOCATION REQUIRED BY NOTE 3 OR 4 ABOVE AS APPLICABLE, WHICHEVER IS NEAREST OF (A) OR (B).

| City of Sherwood Oregon | STANDARD DRAWING TITLE | DRAWING NUMBER |
|---|---|---|
| | ASPHALT PAVEMENT TRENCH RESTORATION | RD-45 |
| | SCALE | DATE |
| | N.T.S. | JUL'09 |

# PRIVATE STREET DETAILS

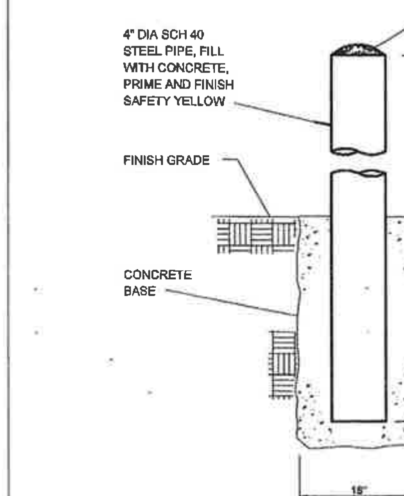


1 BOLLARD DETAIL
SCALE: NTS

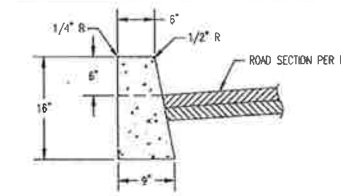


STANDARD CURB
NTS

NOTES:
1. EXPANSION JOINTS SHALL BE PROVIDED:
   - A) AT EACH POINT OF TANGENCY OF THE CURB
   - B) AT EACH COLD JOINT
   - C) ON EACH SIDE OF INLETS
   - D) AT EACH END OF DRIVEWAYS
   - E) AT LOCATION NECESSARY TO LIMIT SPACING TO 45 FEET

-EXPANSION JOINT MATERIAL SHALL BE PRE-MOLDED, NON-EXTRUDING, WITH A MINIMUM THICKNESS OF ½"

2. CONTRACTION JOINTS SHALL BE A MINIMUM OF 2" DEEP AND SPACED A MAXIMUM OF 15-FT APART.
3. BASE ROCK – 1-1/2" MINUS, COMPACTED TO 95% AASHTO T-180 – SHALL BE TOP SUBGRADE OF STREET STRUCTURE OR 4" IN DEPTH, WHICHEVER IS GREATER
4. CONCRETE SHALL BE 3000 PSI AT 28 DAYS

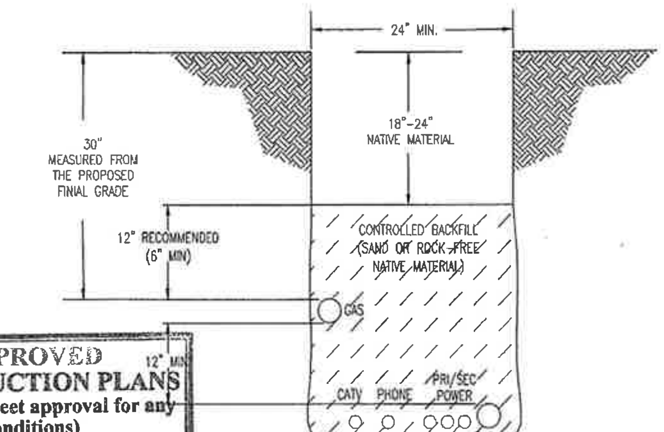


JOINT UTILITY TRENCH TYPICAL SECTION
NTS

APPROVED CONSTRUCTION PLANS
(See cover sheet approval for any conditions)
City of Sherwood
Engineering Division
Date: 7/15/13

STREET NOTES AND DETAILS

PERMIT SET
SENTINEL SELF STORAGE ANNEX
SHERWOOD OREGON
TAX LOT 300 WASHINGTON COUNTY TAX MAP 2S 1 29D


AKS ENGINEERING & FORESTRY
ENGINEERING · PLANNING
SURVEYING · FORESTRY
13910 SW GALBREATH DR., SUITE 100
SHERWOOD, OR 97140
PHONE: (503) 925-8799
FAX: (503) 925-8969


| | |
|---|---|
| DESIGNED BY: | AHH |
| DRAWN BY: | MTS |
| CHECKED BY: | JPC |
| DRAWING NO.: | E2-C102 |
| SCALE: | AS NOTED |

PREPARED FOR:
LANGER FAMILY, LLC.
15705 SW TUALATIN-SHERWOOD RD
SHERWOOD, OR 97140

DATE: 06/21/13

REGISTERED PROFESSIONAL ENGINEER 56539PE OREGON JANUARY 15, 2002 ALEXANDER H. HURLEY
RENEWAL DATE: 6/30/15

JOB NUMBER
2929

SHEET
C102

FUELING PAD – DETAIL 20

SCALE: 1"=20'

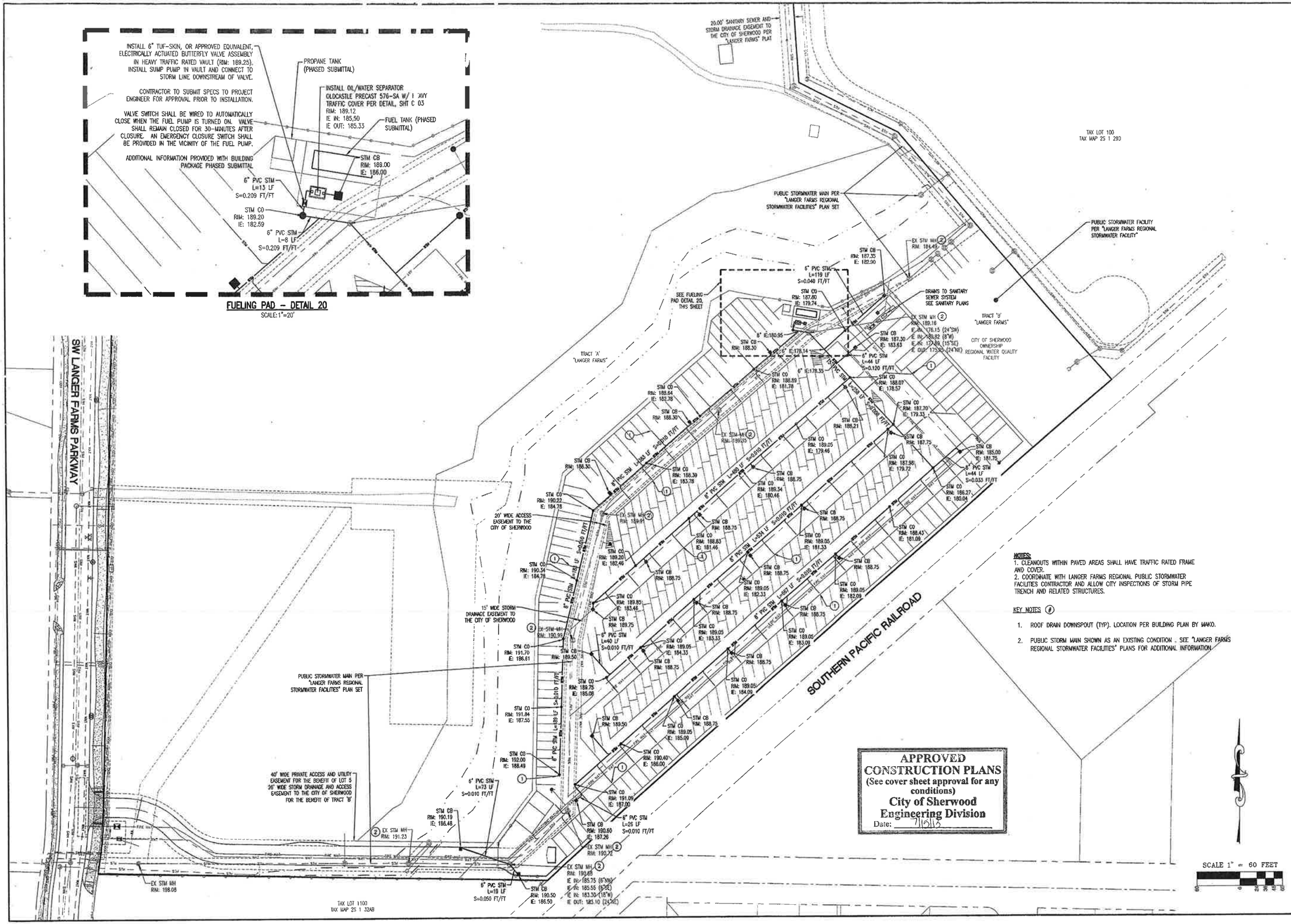


NOTES:
1. CLEANOUTS WITHIN PAVED AREAS SHALL HAVE TRAFFIC RATED FRAME AND COVER.
2. COORDINATE WITH LANGER FARMS REGIONAL PUBLIC STORMWATER FACILITIES CONTRACTOR AND ALLOW CITY INSPECTIONS OF STORM PIPE TRENCH AND RELATED STRUCTURES.

KEY NOTES (#)

1. ROOF DRAIN DOWNSPOUT (TYP). LOCATION PER BUILDING PLAN BY MAKO.
2. PUBLIC STORM MAIN SHOWN AS AN EXISTING CONDITION . SEE "LANGER FARMS REGIONAL STORMWATER FACILITIES" PLANS FOR ADDITIONAL INFORMATION

APPROVED
CONSTRUCTION PLANS
(See cover sheet approval for any conditions)
City of Sherwood
Engineering Division
Date: 7/15/13

# STORMWATER PLAN

## PERMIT SET
## SENTINEL SELF STORAGE ANNEX
## SHERWOOD OREGON
WASHINGTON COUNTY TAX MAP 2S 1 29D
TAX LOT 300

AKS ENGINEERING & FORESTRY
ENGINEERING · PLANNING
SURVEYING · FORESTRY
13910 SW GALBREATH DR.,
SUITE 100
SHERWOOD, OR 97140
PHONE: (503) 925-8799
FAX: (503) 925-8809

| | |
|---|---|
| DESIGNED BY: | AHH |
| DRAWN BY: | MTS |
| CHECKED BY: | JPC |
| DRAWING NO.: | E2-C200 |
| SCALE: | AS NOTED |

PREPARED FOR:
LANGER FAMILY, LLC.
15705 SW TUALATIN-SHERWOOD RD
SHERWOOD, OR 97140

DATE: 06/21/13

REGISTERED PROFESSIONAL ENGINEER
OREGON
JANUARY 15, 2013
ALEXANDER H. HURLEY

RENEWAL DATE: 6/30/15

JOB NUMBER
2929

SHEET
C200

## STORM SEWER CONSTRUCTION NOTES

1. THE FOLLOWING STANDARD SPECIFICATIONS ARE INCORPORATED BY REFERENCE. ALL MATERIALS AND WORK SHALL CONFORM TO APPLICABLE REQUIREMENTS OF THE INTERNATIONAL BUILDING CODE (IBC), UNIFORM PLUMBING CODE (UPC), CITY OF SHERWOOD STANDARD CONSTRUCTION SPECIFICATIONS, AND THE AMERICAN PUBLIC WORKS ASSOCIATION.

2. ALL STORM SYSTEMS SHALL BE CLEANED AND FLUSHED. SEDIMENT, ROCK, AND OTHER DEBRIS SHALL BE COLLECTED AND DISPOSED OF IN A PROPER MANNER. IN NO CASE SHALL DEBRIS BE FLUSHED DOWN A STORM OR SANITARY SEWER FOR DISPOSAL. ALL DAMAGED IRRIGATION AND DRAINAGE PIPE, DRAIN TILES, SEWER LATERALS AND CULVERTS SHALL BE REPAIRED EXPEDITIOUSLY. DEBRIS COLLECTED SHALL BE DISPOSED OF IN A COMMERCIAL LANDFILL OR OTHER APPROVED LOCATION.

3. INSTALLATION OF THE STORM SEWER SHALL BE PERFORMED ACCORDING TO THE STANDARD PRACTICE. ALL BACKFILL WITHIN TRAFFIC AREAS SHALL BE 3/4"-0" COMPACTED CRUSHED ROCK, COMPACTED TO 95% ASTM D-698 PER DETAIL.

4. CONTRACTOR TO COORDINATE THE RELOCATION OF DRY UTILITIES (CABLE, PHONE, GAS, POWER, ETC.) WITH OWNER AS NECESSARY.

5. STORM SEWER PIPE SHALL BE OF THE SIZE AND TYPE LISTED UNLESS SPECIFICALLY SHOWN ON THE PLANS. STORM STRUCTURES SHALL BE THE TYPE SHOWN ON THE DETAIL SHEET. INSTALLATION SHALL BE PER MANUFACTURES RECOMMENDATIONS.

6. STORM PIPE WITH AT LEAST 2-FT OF COVER CAN BE POLYVINYL CHLORIDE (PVC) PIPE SHALL CONFORM TO THE REQUIREMENTS OF ASTM D-3034, SDR 35 (4"-15"), ASTM F-697 SDR 35 (18"-24"), ASTM C-900 D-1740R18 (4"-12"), AND/OR ASTM C-905 D-1784DR18 (16"-24"). GASKETS SHALL CONFORM TO THE REQUIREMENTS OF ASTM C-477 AND ASTM D-3212.

7. STORM PIPE WITH AT LEAST 2-FT OF COVER CAN BE HDPE STORM PIPE SHALL BE HIGH DENSITY POLYETHYLENE PIPE (HDPE) SEAMLESS WITH SMOOTH INTERIOR AND WATERTIGHT GASKETS, CONFORMING TO AASHTO M232, TYPES (4"-10") AND ASTM F2306 (12"-60"). JOINTS AND FITTINGS SHALL COMPLY WITH ASTM F2306.

8. STORM PIPE WITH AT LEAST 1-FT OF COVER CAN BE DUCTILE IRON (DI) PIPE SHALL CONFORM TO THE REQUIREMENTS OF ANSI A21.50-1 OR AWWA C150-1, CEMENT LINED PUSH ON JOINT WITH WATERTIGHT GASKETS. THE MINIMUM THICKNESS CLASS SHALL BE CLASS 50 (12" AND LESS) AND CLASS 51 (14" AND GREATER).

9. ALL STORM PIPES SHALL BE INSTALLED WITH TRACER WIRE. (18 GAUGE, INSULATED COPPER, OR HEAVIER, GREEN IN COLOR OR OTHER APPROVED MATERIALS). THE TRACER WIRE SHALL RUN THE FULL LENGTH OF PIPE AND TO THE TOP OF STRUCTURES AT THE END OF THE PIPE RUN.

10. ALL STORM SEWER PIPING WITHIN 5 FEET OF BUILDINGS SHALL BE IN ACCORDANCE WITH BUILDING PLUMBING PLANS.

## STORM SEWER CONSTRUCTION NOTES (CONTINUED)

10. ALL STORM SEWER PIPING WITHIN 5 FEET OF BUILDINGS SHALL BE IN ACCORDANCE WITH BUILDING PLUMBING PLANS.

11. STORM SEWER PIPES SHALL BE PROVIDED WITH A CLEANOUT AT ITS UPPER TERMINAL AND EACH RUN OF PIPING, WHICH IS MORE THAN ONE HUNDRED (100) FEET IN TOTAL DEVELOPED LENGTH, SHALL BE PROVIDED WITH A CLEANOUT FOR EACH ONE HUNDRED (100) FEET, OR FRACTION THEREOF, IN LENGTH OF SUCH PIPING. ADDITIONAL CLEANOUTS SHALL BE PROVIDED FOR EACH AGGREGATE CHANGE IN HORIZONTAL DIRECTION EXCEEDING 135 DEGREES. ALL REQUIRED CLEANOUTS MAY NOT BE SHOWN ON THE PLANS. MAXIMUM MANHOLE SPACING SHALL BE 300 FEET.

12. ALL PRIVATE STORM SEWER PIPES SHALL BE TESTED AND INSPECTED PER CITY AND IBC/UPC REQUIREMENTS. CONTRACTOR IS RESPONSIBLE FOR COORDINATING INSPECTIONS WITH THE APPROPRIATE CITY INSPECTOR.

13. ALL MANHOLES SHALL BE 48" DIAMETER UNLESS NOTED OTHERWISE.

14. UTILITIES SHOWN ARE DRAWN SCHEMATICALLY. UTILITY PLANS MAY NOT REFLECT THE ACTUAL SPACING AND HORIZONTAL / VERTICAL LOCATION OF NEW OR EXISTING UTILITIES. PLANS DO NOT SHOW ALL BENDS, REDUCERS, WYES, GASKETS, CLEANOUTS, FITTINGS, AND STRUCTURES. CONTRACTOR IS RESPONSIBLE FOR MATERIALS AND LABOR NECESSARY TO CONSTRUCT UTILITIES SHOWN AS INTENDED IN ACCORDANCE WITH APPLICABLE MANUFACTURER, LOCAL, STATE, AND FEDERAL REQUIREMENTS.

15. THE RESPONSIBILITY FOR CONSTRUCTION OF SITE UTILITIES SHALL BEGIN AT A POINT 5' OUTSIDE THE BUILDING SLAB.

16. VIDEO LINE INSPECTION AND COMPACTION TESTING OF BACKFILL MAY BE REQUIRED AT THE REQUEST OF THE CITY INSPECTOR OR PROJECT ENGINEER.

17. THIS PLAN SET IS FOR THE CONSTRUCTION OF THE PRIVATE ONSITE STORM DRAINAGE ONLY. FOR INFORMATION REGARDING THE PUBLIC STORM SYSTEM, SEE THE "LANGER FARMS REGIONAL PUBLIC STORMWATER FACILITIES" PLAN SET.

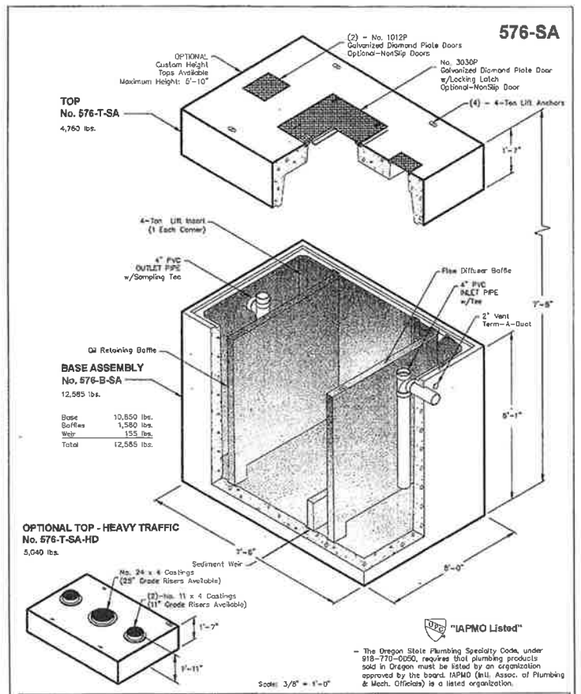


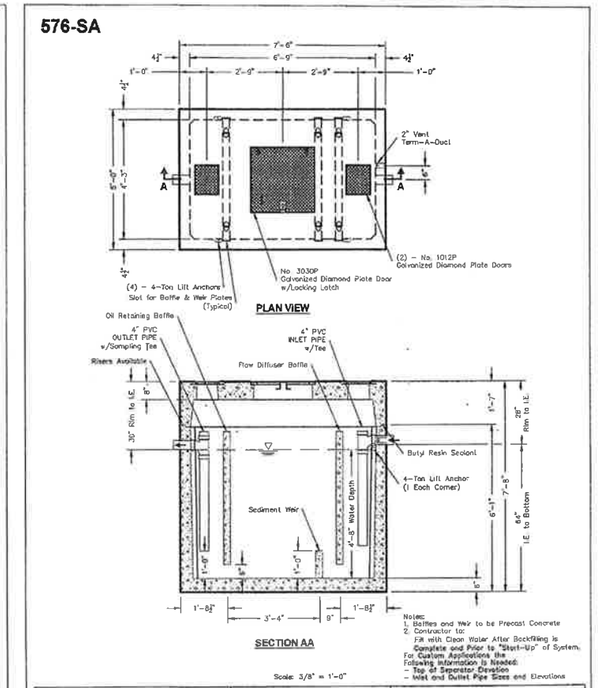


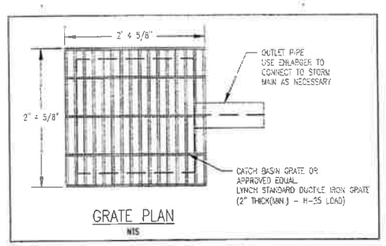


GRATE PLAN
NTS

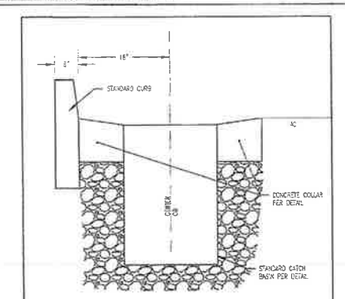


STANDARD CATCH BASIN ADJACENT TO STD CURB
NTS

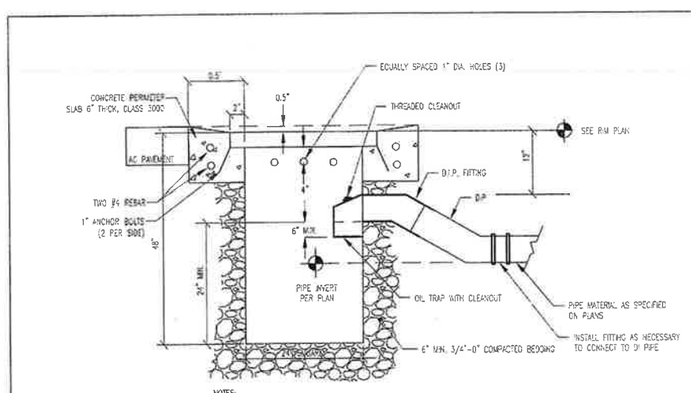


NOTES:

1. CATCH BASIN TO BE CONSTRUCTED OF 10 GAUGE (MINIMUM) STEEL WITH ALL JOINTS WELDED.
2. OIL TRAP CLEANOUT LID TO BE PLUGGED ACCESS.
3. SET CATCH BASIN ON 6" THICK COMPACTED CRUSHED ROCK.
4. CATCH BASIN AND GRATE TO BE DESIGNED TO SUPPORT H-25 LOADING. CONTRACTOR SHALL SUPPLY PROJECT ENGINEER WITH MANUFACTURE SPECIFICATIONS PRIOR TO INSTALLATION.
5. CATCH BASIN OUTLET PIPE SHALL BE 6" DIAMETER UNLESS OTHERWISE NOTED ON PLANS

STANDARD CATCH BASIN
NTS

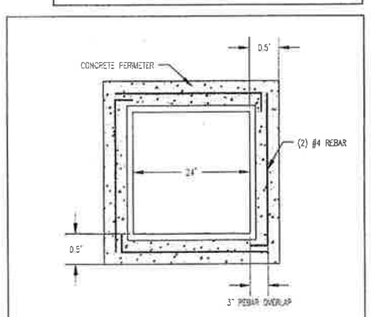


CATCH BASIN CONCRETE APRON PLAN VIEW
NTS

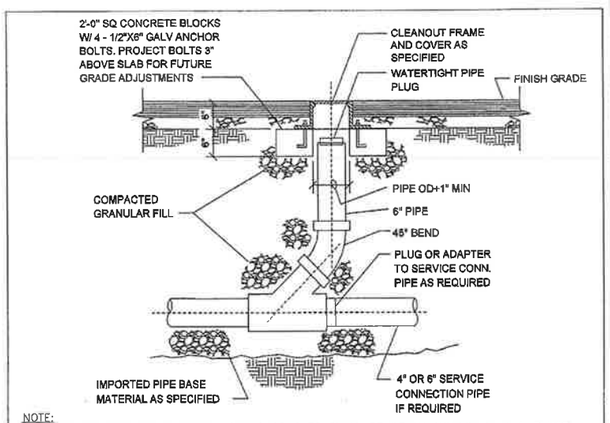


NOTE:
CLEANOUT FITTINGS AND CLEANOUT PLUGS OR CAPS SHALL BE OF AN APPROVED TYPE. PLUGS SHALL HAVE RAISED SQUARE HEADS OR APPROVED COUNTERSUNK RECTANGULAR SLOTS. COUNTERSUNK PLUGS SHALL BE INSTALLED WHERE RAISED HEADS MAY CAUSE A HAZARD. WHEN A HUBLESS BLIND PLUG IS USED, THE COMPLETE COUPLING AND PLUG SHALL BE ACCESSIBLE FOR REMOVAL OR REPLACEMENT. OPSC 707

1 CLEANOUT DETAIL
SCALE: NTS

APPROVED
CONSTRUCTION PLANS
(See cover sheet approval for any conditions)
City of Sherwood
Engineering Division
Date: 7/19/13

PRIVATE STORM NOTES AND DETAILS

PERMIT SET
SENTINEL SELF STORAGE ANNEX
SHERWOOD
TAX LOT 300
OREGON
WASHINGTON COUNTY TAX MAP 2S 1 29D


AKS ENGINEERING & FORESTRY
ENGINEERING · PLANNING
SURVEYING · FORESTRY
13910 SW GALBREATH DR., SUITE 100
SHERWOOD, OR 97140
PHONE: (503) 925-8799
FAX: (503) 925-8809


| | |
|---|---|
| DESIGNED BY: | AHH |
| DRAWN BY: | MTS |
| CHECKED BY: | JPC |
| DRAWING NO.: | E2-C201 |
| SCALE: | AS NOTED |

PREPARED FOR:
LANGER FAMILY, LLC.
15705 SW TUALATIN-SHERWOOD RD
SHERWOOD, OR 97140

DATE: 06/21/13

REGISTERED PROFESSIONAL ENGINEER — OREGON — JANUARY 15, 2002 — ALEXANDER H. HURLEY
RENEWAL DATE: 6/30/15

JOB NUMBER
2929

SHEET
C201

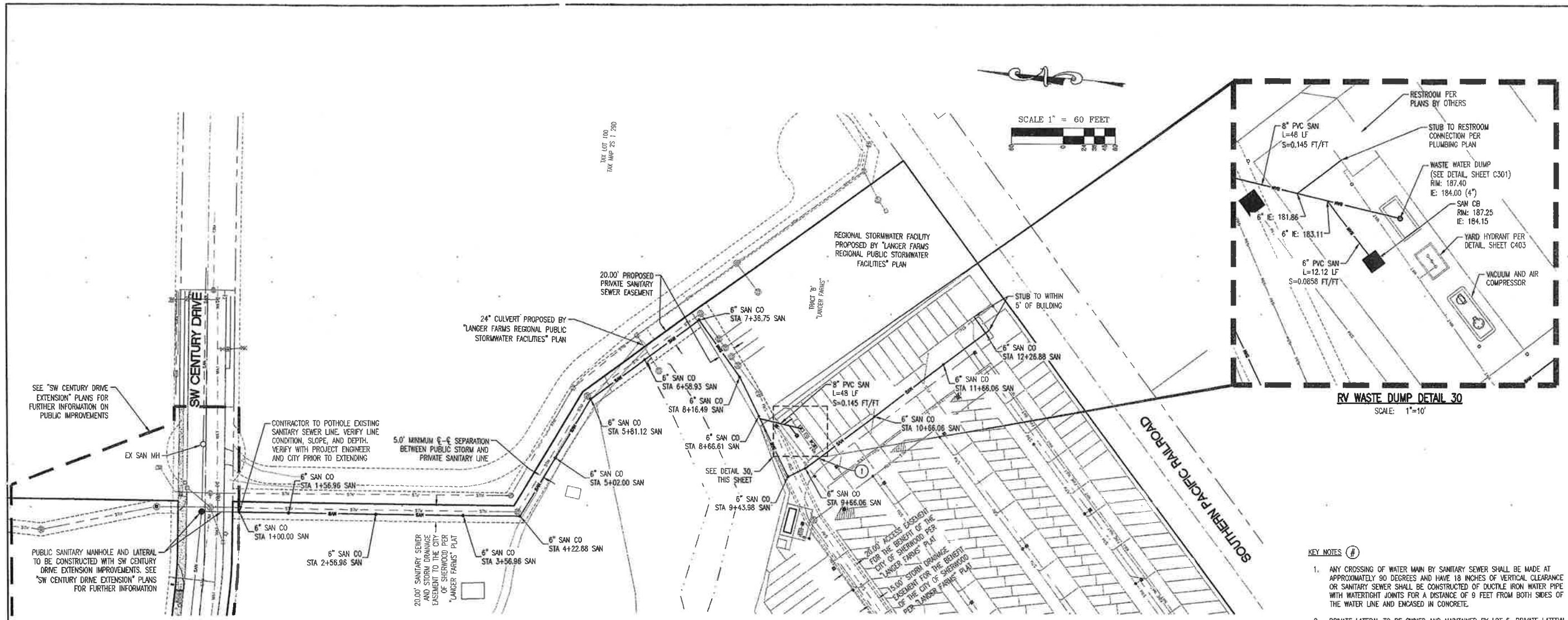


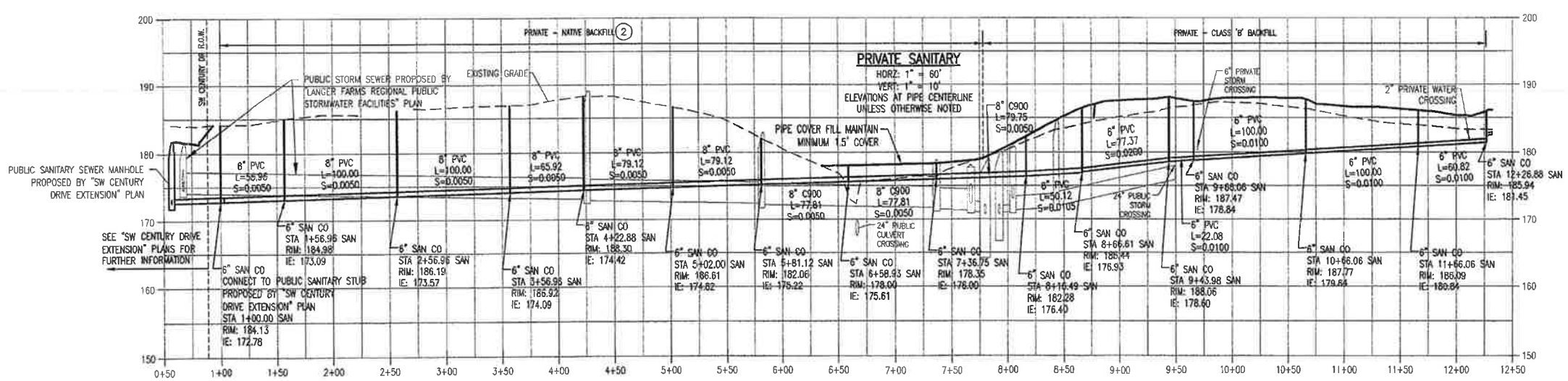


KEY NOTES (#)

1. ANY CROSSING OF WATER MAIN BY SANITARY SEWER SHALL BE MADE AT APPROXIMATELY 90 DEGREES AND HAVE 18 INCHES OF VERTICAL CLEARANCE OR SANITARY SEWER SHALL BE CONSTRUCTED OF DUCTILE IRON WATER PIPE WITH WATERTIGHT JOINTS FOR A DISTANCE OF 9 FEET FROM BOTH SIDES OF THE WATER LINE AND ENCASED IN CONCRETE.
2. PRIVATE LATERAL TO BE OWNED AND MAINTAINED BY LOT 5. PRIVATE LATERAL LENGTH AND LOCATION ARE AS AGREED UPON BY CLEAN WATER SERVICES AND CITY OF SHERWOOD ENGINEERING DEPARTMENT AS THE LATERAL IS A LONG DEAD END LINE WITH NO PUBLIC BENEFIT.

APPROVED
CONSTRUCTION PLANS
(See cover sheet approval for any conditions)
City of Sherwood
Engineering Division
Date: 1/15/13

# SANITARY SEWER PLAN

PERMIT SET

SENTINEL SELF STORAGE ANNEX
SHERWOOD
TAX LOT 300

OREGON
WASHINGTON COUNTY TAX MAP 2S 1 28D

AKS ENGINEERING & FORESTRY
ENGINEERING · PLANNING
SURVEYING · FORESTRY
13910 SW GALBREATH DR., SUITE 100
SHERWOOD, OR 97140
PHONE: (503) 925-8799
FAX: (503) 925-8889

| | |
|---|---|
| DESIGNED BY: | AHH |
| DRAWN BY: | MTS |
| CHECKED BY: | JPC |
| DRAWING NO.: | E2-C300 |
| SCALE: | AS NOTED |

PREPARED FOR:
LANGER FAMILY, LLC.
15705 SW TUALATIN-SHERWOOD RD
SHERWOOD, OR 97140

DATE: 06/21/13

REGISTERED PROFESSIONAL ENGINEER
OREGON
JANUARY 15, 2013
ALEXANDER H. HURLEY
RENEWAL DATE: 6/30/15

JOB NUMBER
2929

SHEET
C300

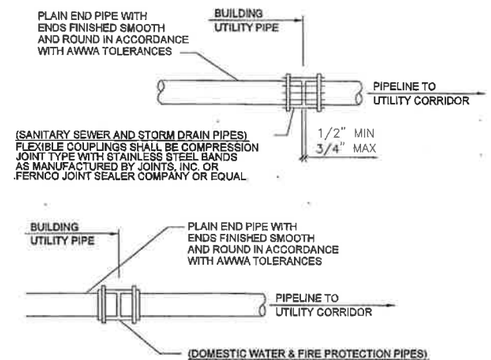


1
SCALE: NTS

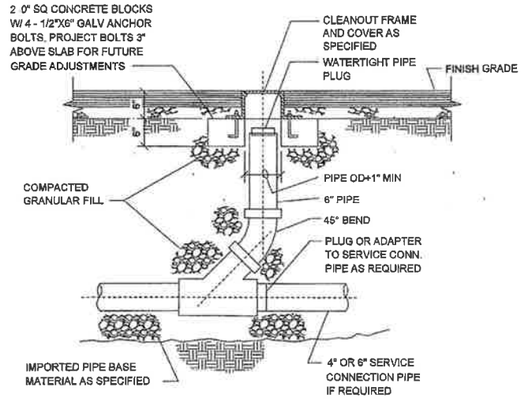


NOTE:
CLEANOUT FITTINGS AND CLEANOUT PLUGS OR CAPS SHALL BE OF AN APPROVED TYPE. PLUGS SHALL HAVE RAISED SQUARE HEADS OR APPROVED COUNTERSUNK RECTANGULAR SLOTS. COUNTERSUNK PLUGS SHALL BE INSTALLED WHERE RAISED HEADS MAY CAUSE A HAZARD. WHEN A HUBLESS BLIND PLUG IS USED, THE COMPLETE COUPLING AND PLUG SHALL BE ACCESSIBLE FOR REMOVAL OR REPLACEMENT. OPSC 707

2
SCALE: NTS

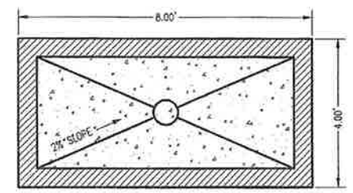


PLAN VIEW

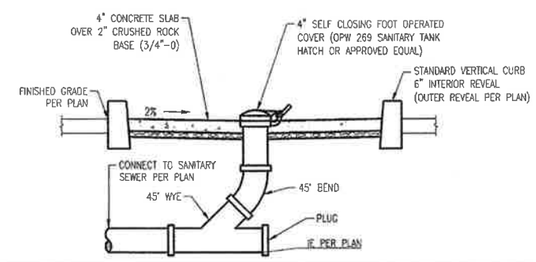


SECTION VIEW

NOTES:
1. CONCRETE SHALL BE COMMERCIAL MIX WITH MIN COMPRESSIVE STRENGTH OF 3300 PSI AT 28-DAYS.
2. PROVIDE 4" THICK CRUSHED ROCK BASE BELOW CURB (3/4"-0) COMPACTED TO 95% MAX DENSITY.
3. PROVIDE PIPE BEDDING AND BACKFILL PER TRENCH DETAIL.

5 WASTE WATER DUMP DETAIL
SCALE: NTS

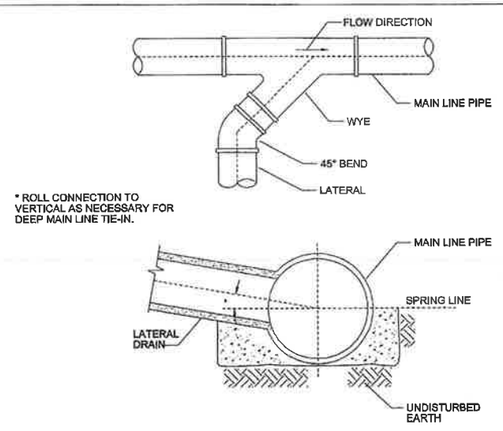


3 GRAVITY LATERAL CONNECTION DETAIL
SCALE: NTS

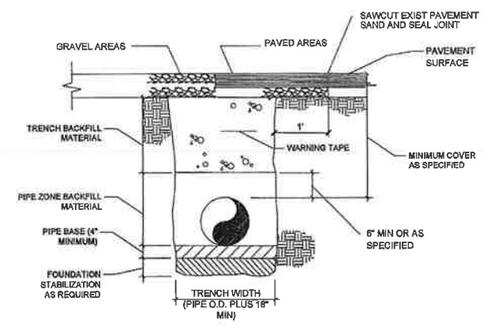


4 TRENCH DETAIL
SCALE: NTS

## NOTES:

1. THE FOLLOWING STANDARD SPECIFICATIONS ARE INCORPORATED BY REFERENCE. ALL MATERIALS AND WORK SHALL CONFORM TO APPLICABLE REQUIREMENTS OF THE INTERNATIONAL BUILDING CODE (IBC), UNIFORM PLUMBING CODE (UPC), CITY OF SHERWOOD STANDARD CONSTRUCTION SPECIFICATIONS, AND THE AMERICAN PUBLIC WORKS ASSOCIATION.

2. ALL SANITARY SEWER SYSTEMS SHALL BE CLEANED AND FLUSHED. SEDIMENT, ROCK, AND OTHER DEBRIS SHALL BE COLLECTED AND DISPOSED OF IN A PROPER MANNER. IN NO CASE SHALL DEBRIS BE FLUSHED DOWN A STORM OR SANITARY SEWER FOR DISPOSAL.

3. SANITARY SEWER PIPE SHALL BE OF THE SIZE AND TYPE NOTED ON THE PLANS.

4. INSTALLATION OF THE SANITARY SEWER SHALL BE PERFORMED ACCORDING TO THE STANDARD PRACTICE. ALL BACKFILL IN TRAFFIC AREAS SHALL BE 3/4"-0" COMPACTED CRUSHED ROCK, COMPACTED TO 95% ASTM D-698 PER DETAIL.

5. CONTRACTOR TO COORDINATE THE RELOCATION OF DRY UTILITIES (CABLE, PHONE, GAS, POWER, ETC.) WITH OWNER AS NECESSARY.

6. POLYVINYL CHLORIDE (PVC) PIPE SHALL CONFORM TO THE REQUIREMENTS OF ASTM D-3034, SDR 35 (4"-15"), ASTM F-697 SDR 35 (18"-24"), AND/OR ASTM C-900 D-174DR18 (4"-12", ASTM C-905 D-1784DR18 (16"-24"). GASKETS SHALL CONFORM TO THE REQUIREMENTS OF ASTM C-477 AND ASTM D-3212.

7. DUCTILE IRON (DI) PIPE SHALL CONFORM TO THE REQUIREMENTS OF ANSI A21.50-1 OR AWWA C150-1, CEMENT LINED PUSH ON JOINT. THE MINIMUM THICKNESS CLASS SHALL BE CLASS 50 (12" AND LESS) AND CLASS 51 (14" AND GREATER).

8. ALL SANITARY SEWER PIPES SHALL BE INSTALLED WITH TRACER WIRE. (18 GAUGE, INSULATED COPPER, OR HEAVIER, GREEN IN COLOR OR APPROVED MATERIALS). THE TRACER WIRE SHALL RUN THE FULL LENGTH OF PIPE AND TO THE TOP OF STRUCTURES AT THE END OF THE PIPE RUN.

9. ALL SANITARY SEWER PIPING WITHIN 5 FEET OF BUILDINGS SHALL BE IN ACCORDANCE WITH BUILDING AND PLUMBING PLANS.

10. SANITARY SEWER PIPES SHALL BE PROVIDED WITH A CLEANOUT AT ITS UPPER TERMINAL AND EACH RUN OF PIPING, WHICH IS MORE THAN ONE HUNDRED (100) FEET IN TOTAL DEVELOPED LENGTH, SHALL BE PROVIDED WITH A CLEANOUT FOR EACH ONE HUNDRED (100) FEET, OR FRACTION THEREOF, IN LENGTH OF SUCH PIPING. ADDITIONAL CLEANOUTS SHALL BE PROVIDED FOR EACH AGGREGATE CHANGE IN HORIZONTAL DIRECTION EXCEEDING 135 DEGREES. ALL REQUIRED CLEANOUTS MAY NOT BE SHOWN ON PLANS. MAXIMUM MANHOLE SPACING SHALL BE 300 FEET.

11. ALL PRIVATE SANITARY SEWER PIPES SHALL BE TESTED AND INSPECTED PER IBC/UPC REQUIREMENTS. CONTRACTOR IS RESPONSIBLE FOR COORDINATING INSPECTIONS WITH THE APPROPRIATE CITY INSPECTOR

12. ALL MANHOLES SHALL BE 48" DIAMETER UNLESS NOTED OTHERWISE.

13. THE RESPONSIBILITY FOR CONSTRUCTION OF SITE UTILITIES SHALL BEGIN AT A POINT 5' OUTSIDE THE BUILDING SLAB.

14. UTILITIES SHOWN ARE DRAWN SCHEMATICALLY. UTILITY PLANS MAY NOT REFLECT THE ACTUAL SPACING AND HORIZONTAL / VERTICAL LOCATION OF NEW OR EXISTING UTILITIES. PLANS DO NOT SHOW ALL BENDS, REDUCERS, WYES, GASKETS, CLEANOUTS, FITTINGS, AND STRUCTURES. CONTRACTOR IS RESPONSIBLE FOR MATERIALS AND LABOR NECESSARY TO CONSTRUCT UTILITIES SHOWN AS INTENDED IN ACCORDANCE WITH APPLICABLE MANUFACTURER, LOCAL, STATE, AND FEDERAL REQUIREMENTS.

15. CONTRACTOR SHALL COORDINATE CONSTRUCTION TO PREVENT ELEVATION CONFLICTS.

16. WATER TESTING OF THE SANITARY SEWER IS ONLY ALLOWED IF THE ENTIRE PIPING SYSTEM IS EXPOSED TO VIEW AND NOT COVERED IN ANY WAY.

17. VIDEO LINE INSPECTION AND COMPACTION TESTING OF BACKFILL MAY BE REQUIRED AT THE REQUEST OF THE CITY INSPECTOR.

18. ABANDONED SANITARY SEWER LINES SHALL BE REMOVED IN THEIR ENTIRETY OR FULLY GROUTED. INSPECTION IS REQUIRED.

APPROVED
CONSTRUCTION PLANS
(See cover sheet approval for any conditions)
City of Sherwood
Engineering Division
Date: 7/15/13

PRIVATE SANITARY
NOTES AND DETAILS

PERMIT SET
SENTINEL SELF STORAGE ANNEX
SHERWOOD
TAX LOT 300
OREGON
WASHINGTON COUNTY TAX MAP 2S 1 29D

AKS ENGINEERING & FORESTRY
ENGINEERING · PLANNING
SURVEYING · FORESTRY
13910 SW GALBREATH DR.,
SUITE 100
SHERWOOD, OR 97140
PHONE: (503) 925-8799
FAX: (503) 925-8889

| | |
|---|---|
| DESIGNED BY: | AHH |
| DRAWN BY: | MTS |
| CHECKED BY: | JPC |
| DRAWING NO.: | E2-C301-402 |
| SCALE: | AS NOTED |

PREPARED FOR:
LANGER FAMILY, LLC.
15705 SW TUALATIN-SHERWOOD RD
SHERWOOD, OR 97140

DATE: 06/21/13

REGISTERED PROFESSIONAL ENGINEER
56030PE
OREGON
JANUARY 15, 2013
ALEXANDER H. HURLEY
RENEWAL DATE: 6/30/15

JOB NUMBER
2929

SHEET
C301

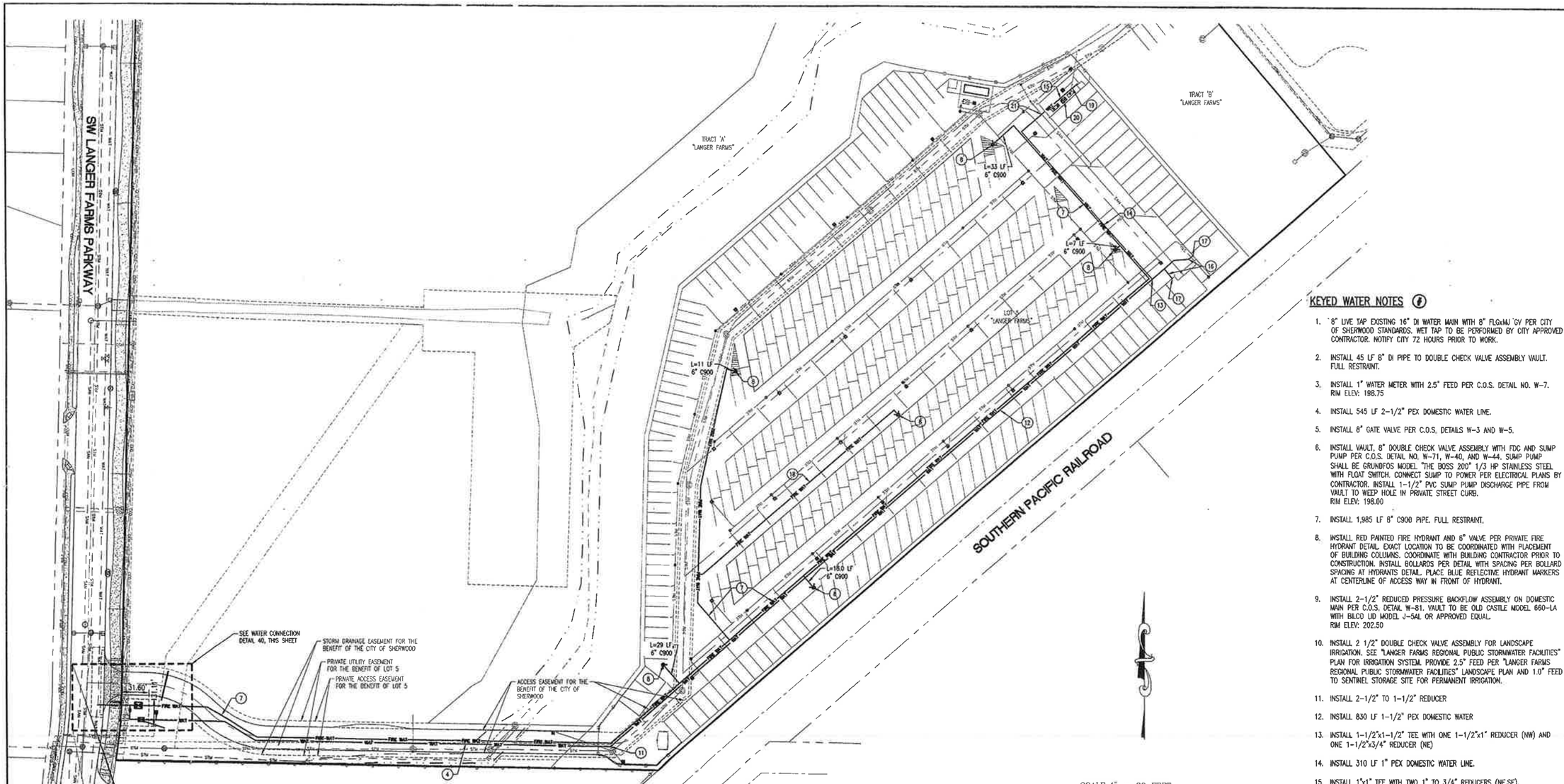


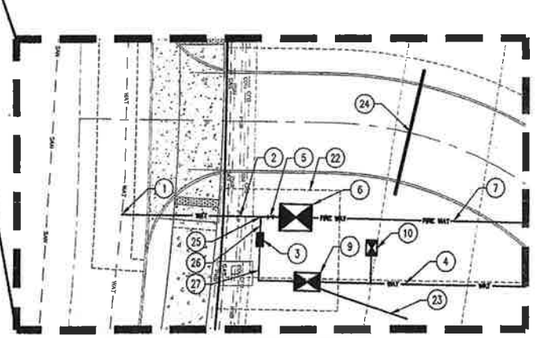

WATER CONNECTION DETAIL 40

SCALE: 1"=20'

APPROVED
CONSTRUCTION PLANS
(See cover sheet approval for any conditions)
City of Sherwood
Engineering Division
Date: 7/8/13

## KEYED WATER NOTES

1. 8" LIVE TAP EXISTING 16" DI WATER MAIN WITH 8" FLGx(4)J GV PER CITY OF SHERWOOD STANDARDS. WET TAP TO BE PERFORMED BY CITY APPROVED CONTRACTOR. NOTIFY CITY 72 HOURS PRIOR TO WORK.
2. INSTALL 45 LF 8" DI PIPE TO DOUBLE CHECK VALVE ASSEMBLY VAULT. FULL RESTRAINT.
3. INSTALL 1" WATER METER WITH 2.5" FEED PER C.O.S. DETAIL NO. W-7. RIM ELEV: 198.75
4. INSTALL 545 LF 2-1/2" PEX DOMESTIC WATER LINE.
5. INSTALL 8" GATE VALVE PER C.O.S. DETAILS W-3 AND W-5.
6. INSTALL VAULT, 8" DOUBLE CHECK VALVE ASSEMBLY WITH FDC AND SUMP PUMP PER C.O.S. DETAIL NO. W-71, W-40, AND W-44. SUMP PUMP SHALL BE GRUNDFOS MODEL "THE BOSS 200" 1/3 HP STAINLESS STEEL WITH FLOAT SWITCH. CONNECT SUMP TO POWER PER ELECTRICAL PLANS BY CONTRACTOR. INSTALL 1-1/2" PVC SUMP PUMP DISCHARGE PIPE FROM VAULT TO WEEP HOLE IN PRIVATE STREET CURB. RIM ELEV: 198.00
7. INSTALL 1,985 LF 8" C900 PIPE. FULL RESTRAINT.
8. INSTALL RED PAINTED FIRE HYDRANT AND 6" VALVE PER PRIVATE FIRE HYDRANT DETAIL. EXACT LOCATION TO BE COORDINATED WITH PLACEMENT OF BUILDING COLUMNS. COORDINATE WITH BUILDING CONTRACTOR PRIOR TO CONSTRUCTION. INSTALL BOLLARDS PER DETAIL WITH SPACING PER BOLLARD SPACING AT HYDRANTS DETAIL. PLACE BLUE REFLECTIVE HYDRANT MARKERS AT CENTERLINE OF ACCESS WAY IN FRONT OF HYDRANT.
9. INSTALL 2-1/2" REDUCED PRESSURE BACKFLOW ASSEMBLY ON DOMESTIC MAIN PER C.O.S. DETAIL W-81. VAULT TO BE OLD CASTLE MODEL 660-LA WITH BILCO LID MODEL J-5AL OR APPROVED EQUAL. RIM ELEV: 202.50
10. INSTALL 2 1/2" DOUBLE CHECK VALVE ASSEMBLY FOR LANDSCAPE IRRIGATION. SEE "LANGER FARMS REGIONAL PUBLIC STORMWATER FACILITIES" PLAN FOR IRRIGATION SYSTEM. PROVIDE 2.5" FEED PER "LANGER FARMS REGIONAL PUBLIC STORMWATER FACILITIES" LANDSCAPE PLAN AND 1.0" FEED TO SENTINEL STORAGE SITE FOR PERMANENT IRRIGATION.
11. INSTALL 2-1/2" TO 1-1/2" REDUCER
12. INSTALL 830 LF 1-1/2" PEX DOMESTIC WATER
13. INSTALL 1-1/2"x1-1/2" TEE WITH ONE 1-1/2"x1" REDUCER (NW) AND ONE 1-1/2"x3/4" REDUCER (NE)
14. INSTALL 310 LF 1" PEX DOMESTIC WATER LINE.
15. INSTALL 1"x1" TEE WITH TWO 1" TO 3/4" REDUCERS (NE,SE).
16. INSTALL 72 LF 3/4" PEX DOMESTIC WATER LINE.
17. STUB 3/4" SERVICE TO BUILDING FOR POSSIBLE FUTURE USE.
18. INSTALL 292 LF 6" C900 PIPE TO PRIVATE FIRE HYDRANT. FULL RESTRAINT.
19. INSTALL 30 LF OF 3/4" PEX DOMESTIC WATER. STUB CONNECTION TO RESTROOM PER BUILDING PLUMBING PLANS.
20. INSTALL THREE 3/4" FROST PROOF HOSE YARD HYDRANTS IN VAULT PER YARD HYDRANT DETAIL, SEE SHEET C403
21. ANY CROSSING OF WATER MAIN BY SANITARY SEWER SHALL BE MADE AT APPROXIMATELY 90 DEGREES AND HAVE 18 INCHES OF VERTICAL CLEARANCE OR SANITARY SEWER SHALL BE CONSTRUCTED OF DUCTILE IRON WATER PIPE WITH WATERTIGHT JOINTS FOR A DISTANCE OF 9 FEET FROM BOTH SIDES OF THE WATER LINE AND ENCASED IN CONCRETE.
22. WATER METER BOX AND FIREFLOW VALVE WITHIN EASEMENT TO CITY OF SHERWOOD.
23. INSTALL 25 LF OF 4" DUCTILE IRON VAULT DRAIN AT MIN 0.020 FT/FT SLOPE WITH RODENT SCREEN AT VAULT. DAYLIGHT END OF PIPE AND GRADE TO DRAIN TO DITCH.
24. INSTALL 4" PVC C900 SLEEVE FOR LANDSCAPE IRRIGATION (MIN 1.5' COVER)
25. INSTALL 2" CORPORATION STOP WITH 2.0"x2.5" TRANSITION COUPLING.
26. INSTALL 6 LF OF 2.5" TYPE K COPPER PIPE.
27. INSTALL 20 LF OF 2.5" PEX DOMESTIC WATER LINE

# WATER PLAN

## PERMIT SET
## SENTINEL SELF STORAGE ANNEX
## SHERWOOD OREGON

WASHINGTON COUNTY TAX MAP 2S 1 29D
TAX LOT 300

AKS ENGINEERING & FORESTRY
ENGINEERING • PLANNING
SURVEYING • FORESTRY
13910 SW GALBREATH DR.,
SUITE 100
SHERWOOD, OR 97140
PHONE: (503) 925-8799
FAX: (503) 925-8969

| | |
|---|---|
| DESIGNED BY: | AHH |
| DRAWN BY: | MTS |
| CHECKED BY: | JPC |
| DRAWING NO.: | E2-C301-402 |
| SCALE: | AS NOTED |

PREPARED FOR:
LANGER FAMILY, LLC.
15705 SW TUALATIN-SHERWOOD RD
SHERWOOD, OR 97140

DATE: 06/21/13

REGISTERED PROFESSIONAL ENGINEER
56639PE
OREGON
JANUARY 15, 2013
ALEXANDER H. HUDLEY
RENEWAL DATE: 6/30/15

JOB NUMBER
2929

SHEET
C400

## WATER SYSTEM NOTES – PUBLIC

1. ALL WORK AND MATERIALS SHALL COMPLY WITH ALL APPLICABLE CITY CODES AND STANDARDS, THE OREGON STATE HEALTH DIVISION ADMINISTRATION RULES, A.W.W.A. STANDARDS, A.P.W.A. STANDARDS, AND CITY OF SHERWOOD STANDARDS.
2. WATER MAINS SHALL BE PUSH-ON DUCTILE IRON PIPE THAT IS CEMENT-MORTAR LINED, SHALL CONFORM WITH ANSI A21.6 AND ANSI A21.11, AND SHALL BE U.S. TYTON JOINT POINT, AS MANUFACTURED BY UNITED STATES PIPE AND FOUNDRY COMPANY AND PACIFIC STATES CAST IRON COMPANY, OR AS APPROVED. THE TYPE AND THICKNESS CLASS SHALL BE PIPE CLASS 52 FOR PIPE DIAMETERS OF 10" AND SMALLER, PIPE CLASS 51 FOR PIPE DIAMETERS BETWEEN 12" AND 16", AND PIPE CLASS 50 FOR DIAMETERS OF 18" AND LARGER. THE RUBBER RING GASKETS SHALL CONFORM TO ANSI A21.11, AND SHALL BE FURNISHED WITH THE PIPE. A NON-TOXIC VEGETABLE SOAP LUBRICANT SHALL BE SUPPLIED FROM THE PIPE MANUFACTURER IN SUFFICIENT QUANTITIES FOR INSTALLING THE PIPE FURNISHED.
3. ALL PIPE SHALL HAVE MINIMUM COVER OF THREE-FEET BELOW THE FUTURE FINISHED GRADES IN EASEMENTS AND STREET RIGHT-OF-WAYS.
4. ALL VALVES SHALL BE PER CITY OF SHERWOOD WATER SYSTEM STANDARDS AND CITY CODES, STANDARD DETAILS, AND DRAWINGS.
5. ALL WATER SERVICES AND METERS ARE TO BE SET BY THE CITY OF SHERWOOD.
6. ALL PUBLIC FIRE HYDRANTS SHALL BE PER CITY OF SHERWOOD WATER SYSTEM STANDARDS AND CITY CODES, STANDARD DETAILS, AND DRAWINGS.
7. ALL TEES, ELBOWS, BENDS, AND BLOW-OFF LOCATIONS SHALL, UNLESS OTHERWISE NOTED, HAVE A POURED-IN-PLACE CONCRETE THRUST BLOCK PER CITY OF SHERWOOD STANDARDS.
8. ALL SANITARY SEWER LINES WITHIN 10 FEET LATERALLY OR 18 INCHES VERTICALLY OF A WATER MAIN SHALL BE ENCASED IN CONCRETE, OR CONSTRUCTED OF DUCTILE IRON PIPE WITH WATERTIGHT JOINTS.
9. ANY CROSSING OF WATER MAIN BY SANITARY SEWER SHALL BE MADE AT APPROXIMATELY 90 DEGREES AND HAVE 18 INCHES OF VERTICAL CLEARANCE OR SANITARY SEWER SHALL BE CONSTRUCTED OF DUCTILE IRON WATER PIPE WITH WATERTIGHT JOINTS FOR A DISTANCE OF 9 FEET FROM BOTH SIDES OF THE WATER LINE AND ENCASED IN CONCRETE
10. JOINT DEFLECTION ALLOWED ONLY WITH THE APPROVAL OF THE PROJECT ENGINEER AND INSPECTOR AND BE PER CITY OF SHERWOOD STANDARDS.
11. IF REQUIRED, OREGON STATE HEALTH DIVISION BACTERIOLOGICAL TESTS SHALL BE TAKEN BY THE CITY OF SHERWOOD.
12. HYDROSTATIC TESTS SHALL CONFORM WITH ALL APPLICABLE CODES AND BE MONITORED BY THE INSPECTOR OR PROJECT ENGINEER.
13. DISINFECTION: PIPELINES SHALL BE FLUSHED AND DISINFECTED BEFORE PLACING INTO SERVICE, AFTER PERFORMING HYDROSTATIC TESTING. DISINFECTION SHALL CONFORM WITH ALL APPLICABLE CODES. DISCHARGING OF THE HIGHLY CHLORINATED WATER USED FOR DISINFECTION SHALL NOT BE DISCHARGED INTO SURFACE WATERS. APPLICABLE FEDERAL, STATE, AND LOCAL REGULATIONS CONCERNING DISCHARGE SHALL BE FOLLOWED. TESTING AND INSPECTION SHALL BE IN ACCORDANCE WITH ALL APPLICABLE CODES.
14. PRIOR TO TAPPING INTO EXISTING WATER MAINS, THE CONTRACTOR WILL CONTACT THE CITY OF SHERWOOD INSPECTOR 72 HOURS PRIOR.
15. TAPPING SLEEVES SHALL BE DUCTILE IRON, EPOXY COATED STEEL, OR STAINLESS STEEL FITTINGS AS SPECIFIED HEREINAFTER. BRANCH OUTLET FROM TAPPING SLEEVE SHALL BE SCHEDULE 10 MATERIAL THICKNESS, MINIMUM.

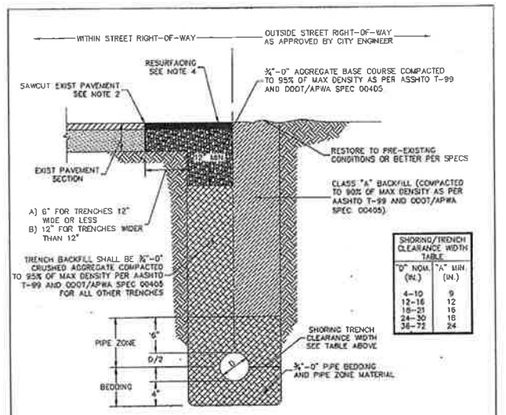


NOTES:

1. THESE TRENCH BACKFILL REQUIREMENTS APPLY TO ALL PUBLIC UTILITY PIPES. FOR ADDITIONAL REQUIREMENTS, SEE CITY STANDARD DESIGN MANUAL SECTION 210.19.
2. SAWCUT EXISTING AC PAVEMENT FULL DEPTH. SAWCUT EXISTING PCC PAVEMENT ACCORDING TO CITY STANDARD DETAILS.
3. FOR PCC PAVEMENT REQUIRED WIDTH OF CUT, SEE CITY STANDARD DETAILS.
4. MATCH EXISTING PAVEMENT MATERIAL(S). THICKNESS SHALL BE AS FOLLOWS:
   4.1. FOR EXISTING PCC: EXISTING PAVEMENT THICKNESS PLUS 2", BUT NOT LESS THAN 8". ON ARTERIAL AND COLLECTOR STREETS, CONCRETE PATCHING MATERIAL SHALL BE HIGH EARLY STRENGTH CLASS 5000 PSI PCC APPROVED BY CITY ENGINEER.
   4.2. FOR EXISTING AC PAVEMENT: RESURFACE TO A MINIMUM OF 3½" OF LEVEL 2, ½" DENSE HMAC OR EXISTING AC THICKNESS PLUS 2", WHICHEVER IS GREATER, BUT DO NOT EXCEED 8". COMPACT AC IN 2" MAX LIFTS TO 91% OF MAXIMUM DENSITY (RICE).
5. ALL CUT EDGES OF AC SHALL BE SAND SEALED WITH CRS-1 OR CRS-2 EMULSIFIED ASPHALT OR EQUIVALENT.
6. FOR CONDUIT TRENCH REQUIREMENTS SEE CITY STANDARD DETAIL RD-46.

| STANDARD DRAWING TITLE | DRAWING NUMBER |
|---|---|
| STANDARD PIPE TRENCH BACKFILL AND SURFACE RESTORATION | RD-47 |
| SCALE: N.T.S. | DATE: JUL' 09 |

Sherwood Oregon — Any alteration of this drawing may not be associated in any way with the City of Sherwood Standard Drawings.

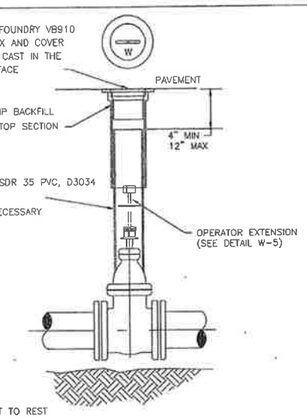


NOTES:

1. VALVE BOX NOT TO REST ON OPERATING ASSEMBLY
2. OPERATOR EXTENSION REQUIRED WHEN VALVE NUT IS DEEPER THAN 3 FEET FROM FINISHED GRADE
3. CENTER VALVE BOX ON AXIS OF OPER NUT
4. PROVIDE 24" SQUARE BY 4" THICK CONCRETE PAD AROUND VALVE BOX OUTSIDE OF PAVED AREAS
5. VALVE BOX COVER SHALL BE A MINIMUM OF 2½ " IN LENGTH

| STANDARD DRAWING TITLE | DRAWING NUMBER |
|---|---|
| TYPICAL GATE VALVE SETTING DETAIL | W-3 |
| SCALE: N.T.S. | DATE: JUL' 09 |

Sherwood Oregon — Any alteration of this drawing may not be associated in any way with the City of Sherwood Standard Drawings.

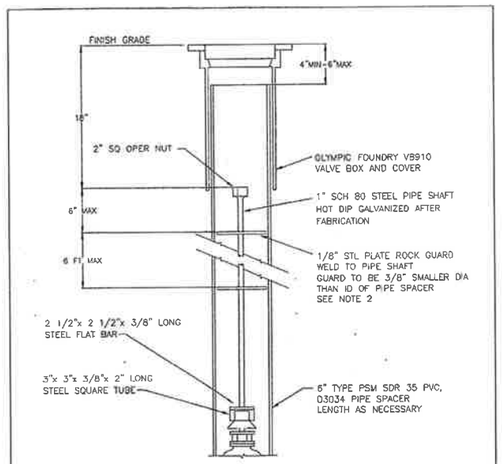


NOTES:

1. EXTEND 2" NUT TO WITHIN 18" OF FINISH GRADE WHEN VALVE NUT IS DEEPER THAN 3 FEET FROM FINISHED GRADE
2. WHERE DEPTH IS OVER 6 FEET, A SECOND PLATE WILL BE INSTALLED EQUALLY BETWEEN ROCK GUARD AND 2" VALVE NUT.

| STANDARD DRAWING TITLE | DRAWING NUMBER |
|---|---|
| VALVE OPERATOR EXTENSION | W-5 |
| SCALE: N.T.S. | DATE: JUL' 09 |

Sherwood Oregon — Any alteration of this drawing may not be associated in any way with the City of Sherwood Standard Drawings.

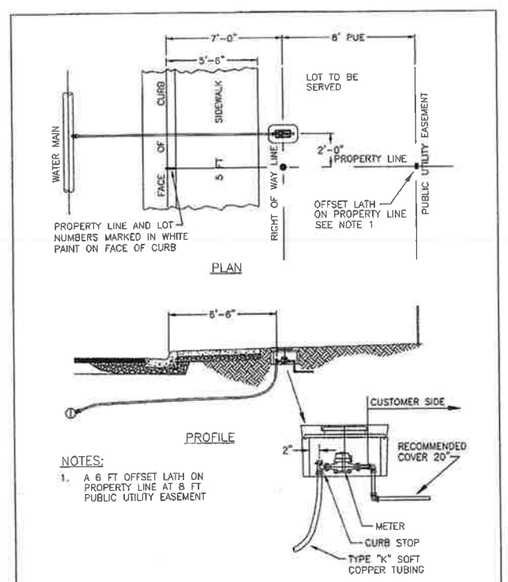


NOTES:

1. A 6 FT OFFSET LATH ON PROPERTY LINE AT 8 FT PUBLIC UTILITY EASEMENT

| STANDARD DRAWING TITLE | DRAWING NUMBER |
|---|---|
| SINGLE WATER SERVICE TYPICAL INSTALLATION | W-7 |
| SCALE: N.T.S. | DATE: JUL' 09 |

Sherwood Oregon — Any alteration of this drawing may not be associated in any way with the City of Sherwood Standard Drawings.

APPROVED
CONSTRUCTION PLANS
(See cover sheet approval for any conditions)
City of Sherwood
Engineering Division
Date: 7/15/13

PUBLIC WATER NOTES AND DETAILS

PERMIT SET
SENTINEL SELF STORAGE ANNEX
SHERWOOD OREGON
WASHINGTON COUNTY TAX MAP 2S 1 29D
TAX LOT 300


AKS ENGINEERING & FORESTRY
ENGINEERING · PLANNING
SURVEYING · FORESTRY
13910 SW GALLBREATH DR., SUITE 100
SHERWOOD, OR 97140
PHONE: (503) 925-8799
FAX: (503) 925-8969


| | |
|---|---|
| DESIGNED BY: | AHH |
| DRAWN BY: | MTS |
| CHECKED BY: | JPC |
| DRAWING NO: | E2-C301-402 |
| SCALE: | AS NOTED |

PREPARED FOR:
LANGER FAMILY, LLC.
15705 SW TUALATIN-SHERWOOD RD
SHERWOOD, OR 97140

DATE: 06/21/13

REGISTERED PROFESSIONAL ENGINEER — OREGON — JANUARY 13, 2003 — ALEXANDER H. HURST
RENEWAL DATE: 6/30/15

JOB NUMBER
2929

SHEET
C401

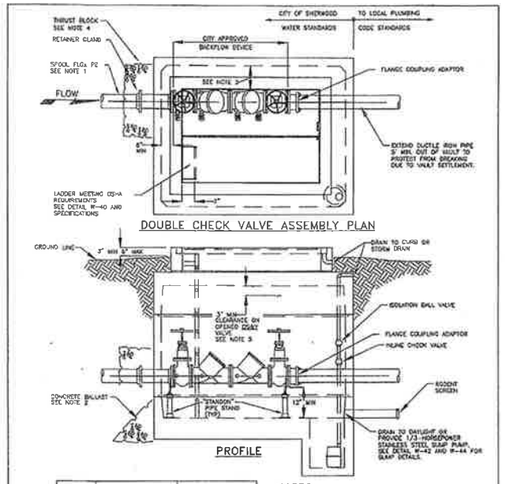


| SIZE | UTILITY VAULT * | BILCO DOOR * |
|---|---|---|
| 3 | 660-WA | J-5AL |
| 4 | 577-WA | J-5AL |
| 6 | 676-WA | J-5AL |
| 8 | 687-WA | JD-3AL |
| 10 | 5106-LA | JD-3AL |

* "OR EQUAL" APPROVED BY CITY ENGINEER

NOTES:

1. CONTRACTOR TO SEAL ALL OPENINGS IN VAULT WITH NON SHRINK GROUT
2. CONTRACTOR TO INSTALL CONCRETE BALLAST 3 CU. YDS. PER VAULT. ONLY IF VAULT WHERE FLOODING OR HIGH GROUND WATER EXIST.
3. CLEARANCE BETWEEN WALL AND DEVICE 8" MIN., 12" MAX. EXCEPT 8" MIN. 9" MAX. FOR 660-WA VAULT
4. THRUST BLOCK 1'-0" MIN THICKNESS
5. FOR USE ON FIRE SERVICE LINE. FOR DOMESTIC SERVICE SEE DETAIL W-76.

| STANDARD DRAWING TITLE | DRAWING NUMBER |
|---|---|
| DCVA ( FOR USE WITH FIRE SERVICE LINE ) | W-71 |
| SCALE: N.T.S. | DATE: JUL' 09 |

Sherwood Oregon

Any alteration of this drawing may not be associated in any way with the City of Sherwood Standard Drawings.

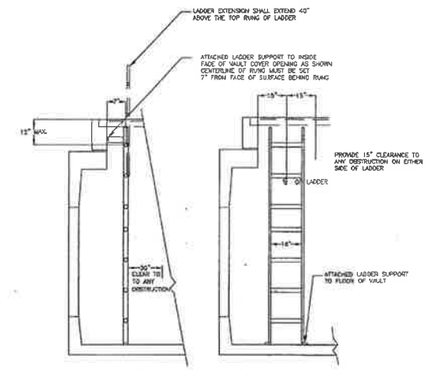


LADDER SHALL MEET THE REQUIREMENTS OF OSHA AND SHALL BE PREPARED WITH A LADDER EXTENSION IN ACCORDANCE WITH CITY CONSTRUCTION SPECIFICATIONS.

| STANDARD DRAWING TITLE | DRAWING NUMBER |
|---|---|
| VAULT LADDER INSTALLATION DETAIL | W-40 |
| SCALE: N.T.S. | DATE: JUL' 09 |

Sherwood Oregon

Any alteration of this drawing may not be associated in any way with the City of Sherwood Standard Drawings.

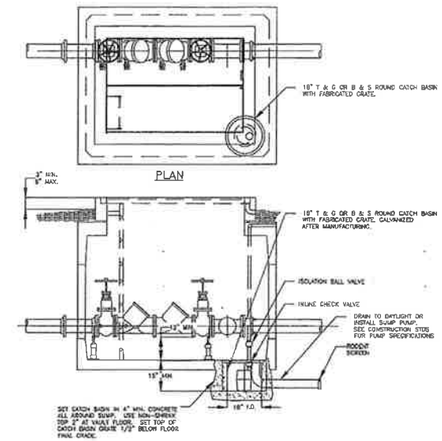


NOTES:

1. SECURE POWER CORD TO SUMP PUMP DISCHARGE PIPING WITH NYLON CABLE TIES.
2. MANUFACTURE GRATE WITH CUTOUT NOTCH FOR DISCHARGE PIPING. GRATE SHALL BE REMOVEABLE WITHOUT DISASSEMBLY OF DISCHARGE PIPING.
3. PROVIDE POWER SOURCE AS REQ'D FOR SUMP PUMP.

| STANDARD DRAWING TITLE | DRAWING NUMBER |
|---|---|
| SUMP PUMP INSTALLATION ALTERNATIVE 2 | W-44 |
| SCALE: N.T.S. | DATE: JUL' 09 |

Sherwood Oregon

Any alteration of this drawing may not be associated in any way with the City of Sherwood Standard Drawings.

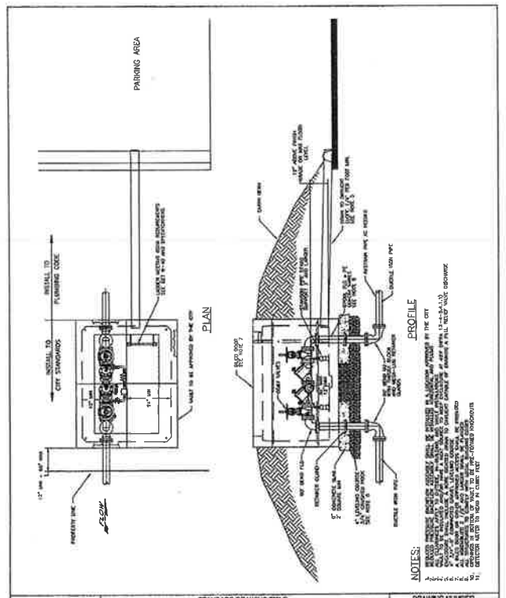


| STANDARD DRAWING TITLE | DRAWING NUMBER |
|---|---|
| REDUCED PRESSURE DETECTOR BACKFLOW ASSEMBLY CUSTOMER OWNED ( ABOVE GROUND ) IN VAULT 2-1/2" - 10" | W-81 |
| SCALE: N.T.S. | DATE: JUL' 09 |

Sherwood Oregon

Any alteration of this drawing may not be associated in any way with the City of Sherwood Standard Drawings.

APPROVED
CONSTRUCTION PLANS
(See cover sheet approval for any conditions)
City of Sherwood
Engineering Division
Date: 7/15/13

# PUBLIC WATER DETAILS

## PERMIT SET
## SENTINEL SELF STORAGE ANNEX
## SHERWOOD OREGON

TAX LOT 300 WASHINGTON COUNTY TAX MAP 2S 1 29D


AKS ENGINEERING & FORESTRY

ENGINEERING · PLANNING
SURVEYING · FORESTRY

13910 SW GALBREATH DR., SUITE 100
SHERWOOD, OR 97140
PHONE: (503) 925-8799
FAX: (503) 925-8969


| | |
|---|---|
| DESIGNED BY: | AHH |
| DRAWN BY: | MTS |
| CHECKED BY: | JPC |
| DRAWING NO.: | E2-C301-402 |
| SCALE: | AS NOTED |

PREPARED FOR:
LANGER FAMILY, LLC.
15705 SW TUALATIN-SHERWOOD RD
SHERWOOD, OR 97140

DATE: 06/21/13

REGISTERED PROFESSIONAL ENGINEER 56539PE OREGON JANUARY 15, 2013 ALEXANDER H. HURLEY

RENEWAL DATE: 6/30/15

JOB NUMBER
2929

SHEET
C402

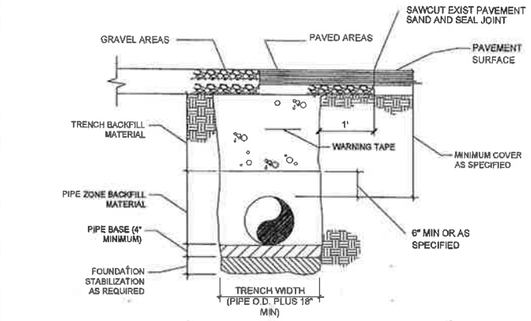


TRENCH DETAIL
SCALE: NTS

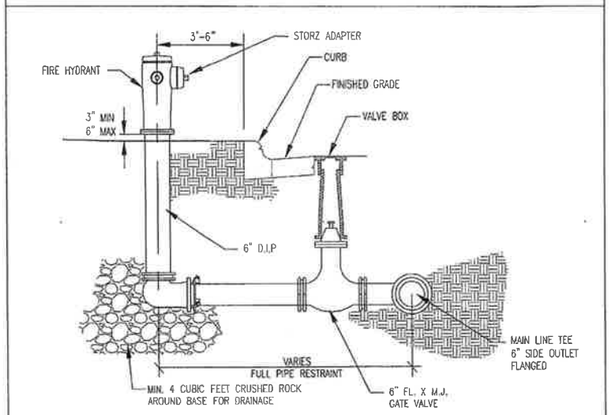


PRIVATE FIRE HYDRANT ASSEMBLY
SCALE: NTS

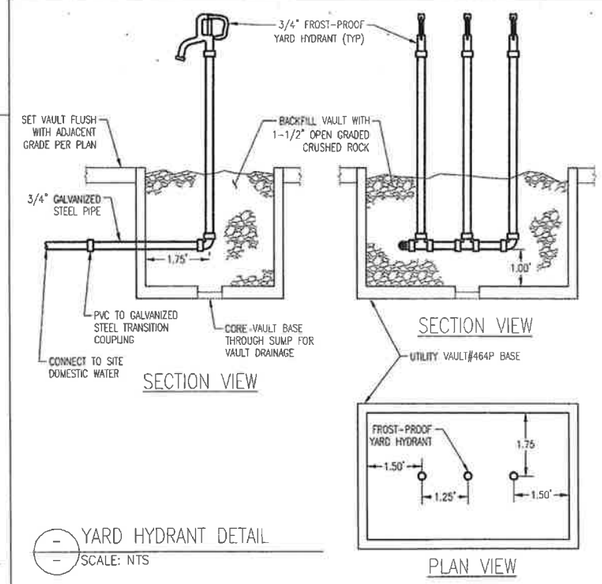


YARD HYDRANT DETAIL
SCALE: NTS

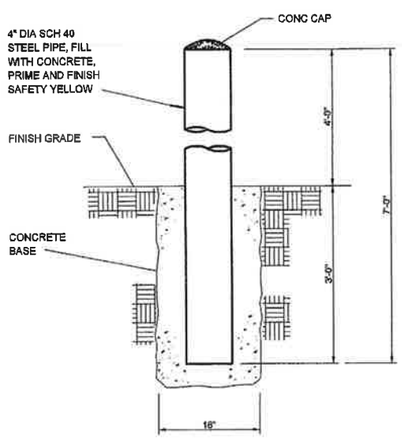


BOLLARD DETAIL
SCALE: NTS

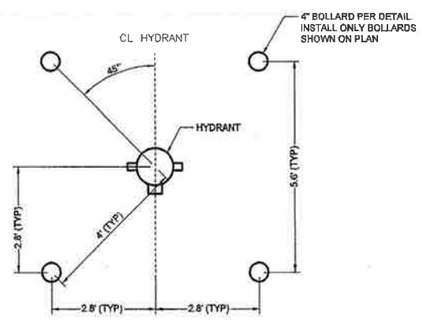


BOLLARD SPACING AT HYDRANTS
SCALE: NTS

## PRIVATE WATER SYSTEM CONSTRUCTION NOTES:

1. ALL MATERIAL SHALL BE OF NEW MANUFACTURE. NO REBUILT OR USED MATERIALS WILL BE ALLOWED.

2. PRIVATE WATER LINES (BUILDING SIDE OF METER) SHALL BE INSTALLED IN ACCORDANCE WITH INTERNATIONAL BUILDING CODE (IBC)/UNIFORM PLUMBING CODE (UPC) REQUIREMENTS. OBTAIN REQUIRED BUILDING/PLUMBING PERMITS PRIOR TO CONSTRUCTION. PRIVATE IMPROVEMENTS INCLUDE ALL IMPROVEMENTS AFTER THE FIRE SERVICE VAULT AND DOMESTIC WATER METER.

3. WATER PIPES SHALL HAVE TRACER WIRE (12 GAUGE) INSTALLED BESIDE PIPE.

4. ALL WORK AND MATERIALS SHALL COMPLY WITH ALL APPLICABLE COUNTY CODES AND STANDARDS, THE OREGON STATE HEALTH DIVISION ADMINISTRATION RULES, A.W.W.A. STANDARDS, A.P.W.A. STANDARDS, AND UPC AND IBC REQUIREMENTS.

5. ALL PIPE SHALL HAVE MINIMUM COVER OF THREE-FEET BELOW THE CURRENT AND FUTURE FINISH GRADES.

6. ALL VALVES SHALL BE PER UNIFORM PLUMBING CODE (UPC) DESIGN STANDARDS, STANDARD DETAILS, AND DRAWINGS.

7. ALL FIRE HYDRANTS SHALL BE PER UNIFORM PLUMBING CODE (UPC) DESIGN STANDARDS, STANDARD DETAILS, AND DRAWINGS.

8. C900 FIRE LINE TO BE FULLY RESTRAINED PER UNIFORM PLUMBING CODE (UPC) DESIGN STANDARDS.

9. ALL SANITARY SEWER LINES WITHIN 10 FEET LATERALLY OR 18 INCHES VERTICALLY OF A WATER MAIN SHALL BE ENCASED IN CONCRETE, OR CONSTRUCTED OF DUCTILE IRON PIPE WITH WATERTIGHT JOINTS.

10. ANY CROSSING OF WATER MAIN BY SANITARY SEWER SHALL BE MADE AT APPROXIMATELY 90 DEGREES AND HAVE 18 INCHES OF VERTICAL CLEARANCE OR SANITARY SEWER SHALL BE CONSTRUCTED OF DUCTILE IRON WATER PIPE WITH WATERTIGHT JOINTS FOR A DISTANCE OF 9 FEET FROM BOTH SIDES OF THE WATER LINE AND ENCASED IN CONCRETE.

11. HYDROSTATIC TESTS SHALL CONFORM WITH ALL APPLICABLE CODES AND BE MONITORED BY THE CITY INSPECTOR.

12. DISINFECTION: POTABLE WATER PIPELINES SHALL BE FLUSHED AND DISINFECTED BEFORE PLACING INTO SERVICE, AFTER PERFORMING HYDROSTATIC TESTING. DISINFECTION SHALL CONFORM WITH ALL APPLICABLE CODES. DISCHARGING OF THE HIGHLY CHLORINATED WATER USED FOR DISINFECTION SHALL NOT BE DISCHARGED INTO SURFACE WATERS. APPLICABLE FEDERAL, STATE, AND LOCAL REGULATIONS CONCERNING DISCHARGE SHALL BE FOLLOWED. TESTING AND INSPECTION SHALL BE IN ACCORDANCE WITH ALL APPLICABLE CODES. CONTACT CITY OF SHERWOOD BUILDING DEPARTMENT TO COORDINATE TESTS.

13. BACKFILL WITHIN ALL TRAFFIC AREAS SHALL BE 3/4"-0 CRUSHED ROCK, COMPACTED TO 95% PER ASTM D-698.

14. INSTALLATION OF THE UNDERGROUND FIRE LINE TO BE INSTALLED PER PROJECT'S FIRE PROTECTION ENGINEER NFPA 24 AND CITY REQUIREMENT.

15. WHEN FIRE PROTECTION, INCLUDING FIRE APPARATUS ACCESS ROADS AND WATER SUPPLIES FOR FIRE PROTECTION, IS REQUIRED TO BE INSTALLED, SUCH PROTECTION SHALL BE INSTALLED AND MADE SERVICEABLE PRIOR TO AND MAINTAINED THROUGHOUT THE TIME OF CONSTRUCTION. THIS INCLUDES FIELD INSPECTIONS, FLUSHING AND TESTING, AND FULL APPROVAL OF ALL FIRE LINES AND FIRE HYDRANTS.

16. A FIRE FLOW TEST SHALL BE MADE AT A NEW FIRE HYDRANT TO VERIFY WATER SUPPLY OF 1500 GPM AT 20 PSI AS A MINIMUM AND MINIMUM AS PER FLOW WORKSHEETS.

17. A "CONTRACTOR'S MATERIALS AND TESTING" – "CERTIFICATE OF COMPLIANCE" WILL BE REQUIRED FOR BOTH THE ABOVE GROUND AND UNDERGROUND PIPING OF THE FIRE SPRINKLER PROTECTION SYSTEMS.

18. ALL PRIVATE DOMESTIC AND FIRE WATER SERVICE LINES OUTSIDE OF THE BUILDING SHALL BE SCHEDULE 40 PVC, SCHEDULE 80 PVC OR C900 PVC CLASS 150, (IN ACCORDANCE WITH UPC REQUIREMENTS) UNLESS OTHERWISE NOTED. WHEN SPECIFIED, DUCTILE IRON PIPE SHALL BE CLASS 52 TYTON-JOINT DUCTILE IRON PIPE CONFORMING TO AWWA C110.

19. CONTRACTORS SHALL CONTACT CITY OF SHERWOOD PUBLIC WORKS AT LEAST 2 BUSINESS DAYS, BUT NOT MORE THAN 10 BUSINESS DAYS, BEFORE COMMENCING AN EXCAVATION.

**20. PRIOR TO CONSTRUCTION, ALL ON-SITE FIRE WATER SYSTEM LINE SIZES, METER SIZES, DOUBLE CHECK DETECTOR ASSEMBLY (DCDA) SIZES, AND OTHER APPURTENANCES SHOWN ON THE UTILITY PLAN SHALL BE VERIFIED BY THE FIRE PROTECTION ENGINEER FOR THE THE PROJECT. ANALYSIS OF THE SYSTEM SHALL BE FROM THE NEW FACILITY SERVICE TO THE POINT OF CONNECTION WITH THE PUBLIC WATER SYSTEM.**

21. THE CONTRACTOR SHALL HAVE THE BACKFLOW PREVENTION ASSEMBLY TESTED BY A CERTIFIED BACKFLOW ASSEMBLY TESTER AT THE TIME OF INSTALLATION.

22. CITY TO PROVIDE TESTING OF DOUBLE CHECK DETECTION AND DOMESTIC BACKFLOW ASSEMBLIES BEHIND METER (FEES APPLY). CONTRACTOR PROHIBITED FROM OPERATING PUBLIC WATER SYSTEM COMPONENTS.

23. CONTRACTOR SHALL COORDINATE CONSTRUCTION TO PREVENT ELEVATION CONFLICTS.

24. THE RESPONSIBILITY FOR CONSTRUCTION OF SITE UTILITIES SHALL BEGIN AT A POINT 5' OUTSIDE THE BUILDING SLAB.

25. FIRE HYDRANT PRESSURE AND FLOW TESTS SHALL BE COORDINATED AND APPROVED BY THE PROJECT'S FIRE PROTECTION ENGINEER.

26. UTILITIES SHOWN ARE DRAWN SCHEMATICALLY. UTILITY PLANS MAY NOT REFLECT THE ACTUAL SPACING AND HORIZONTAL / VERTICAL LOCATION OF NEW OR EXISTING UTILITIES. PLANS DO NOT SHOW ALL BENDS, REDUCERS, WYES, GASKETS, CLEANOUTS, FITTINGS, AND STRUCTURES. CONTRACTOR IS RESPONSIBLE FOR MATERIALS AND LABOR NECESSARY TO CONSTRUCT UTILITIES SHOWN AS INTENDED IN ACCORDANCE WITH APPLICABLE MANUFACTURER, LOCAL, STATE, AND FEDERAL REQUIREMENTS.

27. LICENSED PLUMBERS WORKING FOR A LICENSED PLUMBING CONTRACTOR SHALL INSTALL ALL ON-SITE DOMESTIC WATER SERVICE. ORS 693.025

28. A CERTIFIED BACKFLOW PREVENTION DEVICE TESTER SHALL TEST EACH APPROVED BACKFLOW PREVENTION DEVICE AND A COPY OF THE TESTER'S REPORT BE MADE AVAILABLE FOR THE PLUMBING INSPECTOR TO EXAMINE DURING FINAL PLUMBING INSPECTION. OPSC 603.3.3

29. CONTRACTOR SHALL PROVIDE PROJECT ENGINEER WITH A COPY OF ALL SUBMITTAL DOCUMENTS FOR APPROVAL PRIOR TO INSTALLATION.

30. PRIOR TO THE START OF CONSTRUCTION, A CONSTRUCTION SITE FIRE SAFETY PLAN SHALL BE SUBMITTED TO THE FIRE MARSHAL'S OFFICE FOR REVIEW AND APPROVAL.

31. PRIOR TO THE START OF CONSTRUCTION, FIRE APPARATUS ACCESS ROADS ARE REQUIRED TO BE INSTALLED AND MADE SERVICEABLE.

32. PRIOR TO COMBUSTIBLE MATERIALS BEING MOVED ONSITE, OR START OF VERTICAL CONSTRUCTION, FIRE PROTECTION WATER SUPPLIES SHALL BE INSTALLED AND MADE SERVICEABLE, UNLESS AN APPROVED ALTERNATIVE METHOD OF PROTECTION IS APPROVED BY THE FIRE MARSHAL.

33. PRIOR TO ISSUANCE OF THE PUBLIC UTILITY PERMIT, CONSTRUCTION DOCUMENTS FOR THE UNDERGROUND FIRE PROTECTION INFRASTRUCTURE IMPROVEMENTS, INCLUDING BUT NOT LIMITED TO PLANS, HYDRAULIC CALCULATIONS, AND MATERIALS DATA PACKAGES SHALL BE SUBMITTED. THIS INFORMATION CAN BE PROVIDED AS A DEFERRED SUBMITTAL WITH APPROVAL OF THE FIRE MARSHAL.

34. PRIOR TO THE START OF CONSTRUCTION, ADDRESS SIGNAGE SHALL BE PROVIDED AT EACH ENTRANCE TO THE CONSTRUCTION SITE. ALL SIGNAGE SHALL BE OF AN APPROVED SIZE, WEATHER RESISTANT AND BE MAINTAINED UNTIL REPLACED BY PERMANENT SIGNS.

APPROVED
CONSTRUCTION PLANS
(See cover sheet approval for any conditions)
City of Sherwood
Engineering Division
Date: 7/15/13

# PRIVATE WATER NOTES AND DETAILS

PERMIT SET
SENTINEL SELF STORAGE ANNEX
SHERWOOD OREGON
TAX LOT 300
WASHINGTON COUNTY TAX MAP 2S 1 29D

AKS ENGINEERING & FORESTRY
ENGINEERING · PLANNING
SURVEYING · FORESTRY
13910 SW GALBREATH DR., SUITE 100
SHERWOOD, OR 97140
PHONE: (503) 925-8799
FAX: (503) 925-8969

| | |
|---|---|
| DESIGNED BY: | AHH |
| DRAWN BY: | MTS |
| CHECKED BY: | JPC |
| DRAWING NO.: | E2-C301-402 |
| SCALE: | AS NOTED |

PREPARED FOR:
LANGER FAMILY, LLC.
15705 SW TUALATIN-SHERWOOD RD
SHERWOOD, OR 97140

DATE: 06/21/13

REGISTERED PROFESSIONAL ENGINEER
OREGON
JANUARY 15, 2003
ALEXANDER H. HURLEY
RENEWAL DATE: 6/30/15

JOB NUMBER
2929

SHEET
C403

# PLANT LEGEND

**TREES**

| SYMBOL | QTIES. | BOTANICAL NAME | COMMON NAME | CONDITION | SIZE | SPACING |
|---|---|---|---|---|---|---|
| | 8 | ACER RUBRUM 'FRANKSRED' | RED SUNSET MAPLE | B&B | 2" CAL. | AS SHOWN |
| | 7 | CHAMAECYPARIS NOOTKATENSIS 'PENDULA' | WEEPING ALASKAN CEDAR | B&B | 6'-7' H. | AS SHOWN |

**SHRUBS AND GROUNDCOVERS**

| SYMBOL | QTIES. | BOTANICAL NAME | COMMON NAME | CONDITION | SIZE | SPACING |
|---|---|---|---|---|---|---|
| | 852 | COTONEASTER DAMMERI | BEARBERRY COTONEASTER | CONTAINER | 1 GAL. | 24" O.C. |
| | 122 | MYRICA CALIFORNICA | PACIFIC WAX MYRTLE | CONTAINER | 4' H. | 5' O.C. |
| | 78 | POTENTILLA FRUITICOSA | BUSH CINQUEFOIL | CONTAINER | 2 GAL. | 3' O.C. |
| | 155 | MAHONIA AQUIFOLIUM | TALL OREGON GRAPE | CONDITION | 2 GAL. | 3' O.C. |

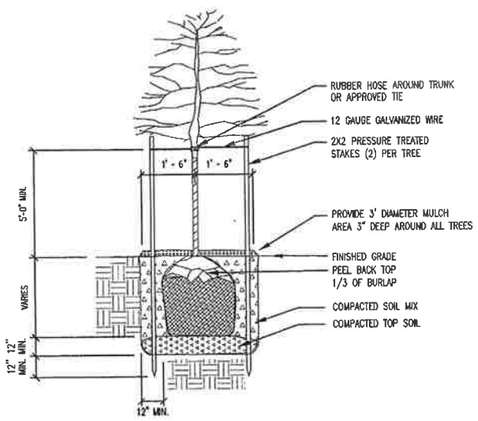


## 1 TYPICAL TREE PLANTING DETAIL

NTS

NOTES:
1. DRIVE STAKES OUTSIDE OF ROOTBALL. SINGLE STAKE TREES LESS THAN 6' TALL.
2. SET TREE 2" ABOVE FINISH GRADE TO ALLOW FOR SETTLING OF SOIL.
3. SOIL MIX FOR TREE PLANTING TO BE 1/3 ORGANIC MATERIALS, 1/3 TOPSOIL, AND 1/3 SANDY LOAM.

NOTES:
1. CONTRACTOR IS RESPONSIBLE FOR VERIFYING ALL PLANT QUANTITIES. IF DISCREPANCIES OCCUR, DESIGN INTENT PREVAILS OVER QUANTITIES LISTED.
2. ALL PLANTS AND PLANTINGS TO CONFORM TO THE CITY OF SHERWOOD DESIGN STANDARDS AND AMERICAN NURSERY STANDARDS ASN 1260.1. ALL LANDSCAPING SHALL BE INSTALLED IN A SOUND WORKMAN-LIKE MANNER AND ACCORDING TO ACCEPTED GOOD PLANTING PROCEDURES IN ACCORDANCE WITH STANDARDS ADOPTED BY THE OREGON LANDSCAPE CONTRACTORS BOARD (OLCB).
3. TREES TO BE PLANTED SHALL MEET THE REQUIREMENTS OF THE AMERICAN ASSOCIATION OF NURSERYMEN (AAN) STANDARDS FOR NURSERY STOCK NO. 1 OR BETTER.
4. PLANT SPECIES, SIZES, ETC. MAY BE SUBSTITUTED OR REVISED BY THE LANDSCAPE ARCHITECT PRIOR TO INSTALLATION DUE TO SITE CONDITIONS, AVAILABILITY, ETC. IN KEEPING WITH THE CITY OF SHERWOOD'S STANDARDS.
5. PLANTS AND PLANTINGS IN VEGETATED CORRIDOR AND STORMWATER FACILITY SHALL CONFORM TO CLEAN WATER SERVICES (CWS) STANDARDS REGARDING SPECIES, SIZE, SPACING, QUANTITIES, INVASIVE PLANT REMOVAL, SOIL PREPARATION, MAINTENANCE, MONITORING, ETC. THESE PLANS ARE PROVIDED BY OTHERS.
6. SET ALL SHRUBS AND GROUNDCOVERS A MINIMUM OF 24" O.C. FROM CURBS, PAVING, AND TREE TRUNKS.
7. MULCH: 3" DEEP DARK 1/2"-3/4" WELL-AGED GROUND OR SHREDDED BARK MULCH UNDER AND AROUND ALL PLANTS IN PLANTINGS BEDS.
8. IRRIGATION: ALL LANDSCAPED AREAS BE AUTOMATICALLY IRRIGATED. PERMANENT IRRIGATION SYSTEM TO BE 'DESIGN-BUILD' BY LANDSCAPE CONTRACTOR WITH AUTOMATIC CONTROLLER, USING THE LATEST WATER-SAVING TECHNOLOGY. PROVIDE DESIGN-BUILD PLANS TO OWNER AND LANDSCAPE ARCHITECT FOR APPROVAL PRIOR TO INSTALLATION.
9. ALL LANDSCAPING SHALL BE MAINTAINED IN A MANNER CONSISTENT WITH THE INTENT OF THE APPROVED LANDSCAPE PLAN. THE OWNER, OR HIS AGENT, SHALL BE RESPONSIBLE FOR THE MAINTENANCE OF ALL LANDSCAPING WHICH SHALL BE MAINTAINED IN GOOD CONDITION SO AS TO PRESENT A HEALTHY, NEAT, AND ORDERLY APPEARANCE, AND SHALL BE KEPT FREE FROM REFUSE, DEBRIS, AND INVASIVE WEEDS. ALL LANDSCAPE MAINTENANCE SHALL FOLLOW ESTABLISHED LANDSCAPE MAINTENANCE INDUSTRY STANDARDS FOR PRUNING, WEEDING, FERTILIZATION, ETC. ANY REQUIRED LANDSCAPING TREES REMOVED MUST BE REPLANTED CONSISTENT WITH THE APPROVED LANDSCAPE PLAN.
10. CWS SENSITIVE AREA SIGNS TO BE PLACED PER "LANGER FARMS REGIONAL PUBLIC STORMWATER FACILITIES" LANDSCAPE PLAN.

# LEGEND

SYMBOL DESCRIPTION

APPROXIMATE CANOPY OF EXISTING TREES TO REMAIN

VEGETATED CORRIDOR
PLANTED PER CLEAN WATER SERVICES (CWS) STANDARDS, IRRIGATED PER PLAN; SEE "LANGER FARMS REGIONAL PUBLIC STORMWATER FACILITIES" PLAN

STORMWATER FACILITY
PLANTED PER CLEAN WATER SERVICES (CWS) STANDARDS, IRRIGATED PER PLAN; SEE "LANGER FARMS REGIONAL PUBLIC STORMWATER FACILITIES" PLAN

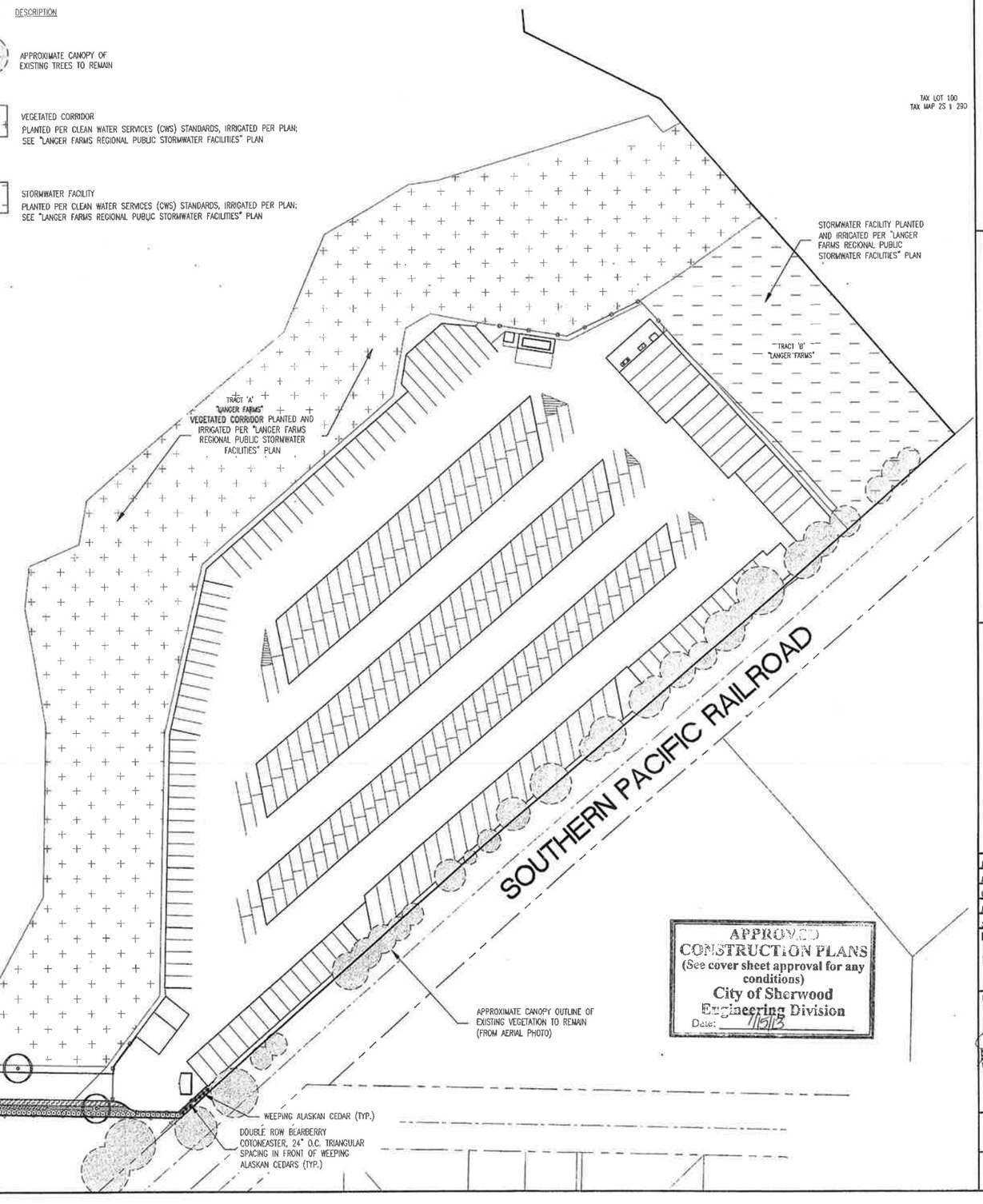


APPROVED
CONSTRUCTION PLANS
(See cover sheet approval for any conditions)
City of Sherwood
Engineering Division
Date: 7/9/13

# LANDSCAPE PLAN

**PERMIT SET**

**SENTINEL SELF STORAGE ANNEX**
**SHERWOOD OREGON**
WASHINGTON COUNTY TAX MAP 2S 1 29D
TAX LOT 300


AKS ENGINEERING & FORESTRY
ENGINEERING · PLANNING
SURVEYING · FORESTRY
13910 SW GALBREATH DR.,
SUITE 100
SHERWOOD, OR 97140
PHONE: (503) 925-8799
FAX: (503) 925-8969


| | |
|---|---|
| DESIGNED BY: | JHH |
| DRAWN BY: | KAH |
| CHECKED BY: | JHH |
| DRAWING NO.: | L1_REVISED |
| SCALE: | AS NOTED |

**PREPARED FOR:**
LANGER FAMILY, LLC.
15705 SW TUALATIN-SHERWOOD RD
SHERWOOD, OR 97140

DATE: 06/21/13

REGISTERED LANDSCAPE ARCHITECT
JAMES H. HENSLEY II
OREGON

JOB NUMBER
2929

SHEET
L1