LANGER FARMS REGIONAL PUBLIC STORMWATER FACILITIES

ENGINEERING CONSTRUCTION PLANS

CITY OF SHERWOOD CITY PLANNING CASE FILE: SUB 12-02, SP 12-05/CUP 12-02 (C.O.S. JOB 4151)

ATTENTION EXCAVATORS:

OREGON LAW REQUIRES YOU TO FOLLOW RULES ADOPTED BY THE OREGON UTILITY NOTIFICATION CENTER. THOSE RULES ARE SET FORTH IN OAR 952-001-0010 THROUGH OAR 952-001-0090. YOU MAY OBTAIN COPIES OF THESE RULES FROM THE CENTER BY CALLING 503-232-1987. IF YOU HAVE ANY QUESTIONS ABOUT THE RULES, YOU MAY CONTACT THE CENTER. YOU MUST NOTIFY THE CENTER AT LEAST TWO BUSINESS DAYS, BEFORE COMMENCING AN EXCAVATION. CALL 1-800-332-2344.

OREGON UTILITY NOTIFICATION CENTER

COUNTY SURVEYOR REQUIRES ADVANCED NOTICE PRIOR THE DISTURBANCE OF ANY MONUMENTS.

VERTICAL DATUM:

ELEVATIONS ARE BASED ON WASHINGTON COUNTY BENCHMARK NO. 103, A BRASS DISK IN CONCRETE AT THE SW CORNER OF THE INTERSECTION OF SW TUALATIN-SHERWOOD ROAD AND THE RAILROAD CROSSING, APPROXIMATELY 1.1 MILE EAST OF SIX CORNERS. WITH A NGVD 29 ELEVATION OF 171.38 FEET.

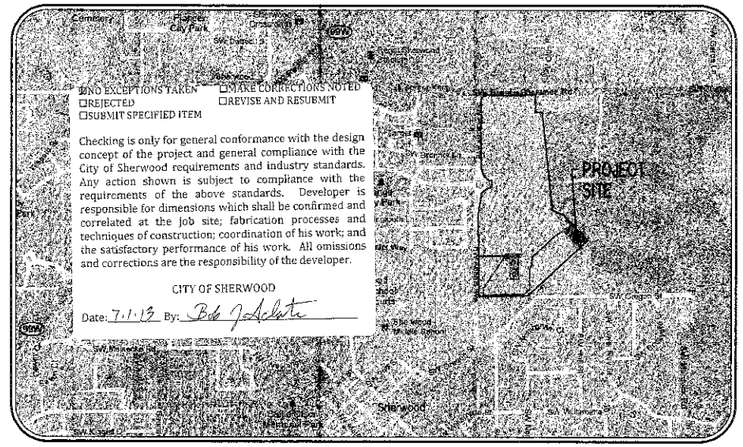

VICINITY MAP

NOT TO SCALE

SHEET INDEX

C000 COVER SHEET WITH VICINITY AND SITE MAPS
C001 GENERAL NOTES
C002 EXISTING CONDITIONS PLAN – NORTH
C003 EXISTING CONDITIONS PLAN – SOUTH

TREE PRESERVATION AND REMOVAL PLANS: SEE APPROVED "SENTINEL STORAGE ANNEX ENGINEERING CONSTRUCTION PLANS"

EROSION CONTROL PLANS: SEE APPROVED "LANGER FARMS/SENTINEL STORAGE ANNEX EROSION AND SEDIMENT CONTROL PLANS"

GRADING PLANS: SEE "SENTINEL STORAGE ANNEX ENGINEERING CONSTRUCTION PLANS"

C070 GRADING PLAN

C200 STORMWATER PLAN SHEET INDEX
C201 STORM 'A' PLAN AND PROFILE – WEST
C202 STORM 'A' AND ACCESS PLAN AND PROFILE – EAST
C203 STORM 'B' PLAN AND PROFILE
C204 STORMWATER FACILITY PLAN AND PROFILE
C205 STORMWATER CONSTRUCTION DETAILS
C206 STORMWATER CONSTRUCTION DETAILS
C207 STORMWATER CONSTRUCTION DETAILS
C208 MANHOLE SECTIONS

L1 STORMWATER FACILITY LANDSCAPE PLAN
L2 STORMWATER FACILITY IRRIGATION PLAN
L3 STORMWATER FAC. LANDSCAPE AND IRRIGATION DETAILS
L4 LANDSCAPE AND IRR. SPECIFICATIONS
L5 LANDSCAPE PLAN
L6 IRRIGATION PLAN
L7 LANDSCAPE AND IRRIGATION DETAILS
L8 LANDSCAPE AND IRRIGATION DETAILS

LEGEND

	EXISTING	PROPOSED		EXISTING	PROPOSED
DECIDUOUS TREE			STORM SEWER CLEAN OUT		
CONIFEROUS TREE			STORM SEWER CATCH BASIN		
FIRE HYDRANT			STORM SEWER MANHOLE		
WATER BLOWOFF			GAS METER		
WATER METER			GAS VALVE		
WATER VALVE			GUY WIRE ANCHOR		
DOUBLE CHECK VALVE			POWER POLE		
AIR RELEASE VALVE			POWER VAULT		
SANITARY SEWER CLEAN OUT			POWER JUNCTION BOX		
SANITARY SEWER MANHOLE			POWER PEDESTAL		
SIGN			COMMUNICATIONS VAULT		
STREET LIGHT			COMMUNICATIONS JUNCTION BOX		
MAILBOX			COMMUNICATIONS RISER		

	EXISTING	PROPOSED
RIGHT-OF-WAY LINE		
BOUNDARY LINE		
PROPERTY LINE		
CENTERLINE		
DITCH		
CURB		
EDGE OF PAVEMENT		
EASEMENT		
FENCE LINE		
GRAVEL EDGE		
POWER LINE	PWR	PWR
OVERHEAD WIRE	OHW	OHW
COMMUNICATIONS LINE	COM	COM
GAS LINE	GAS	GAS
STORM SEWER LINE	STM	STM
SANITARY SEWER LINE	SAN	SAN
WATER LINE	WAT	WAT

PROJECT SITE MAP:

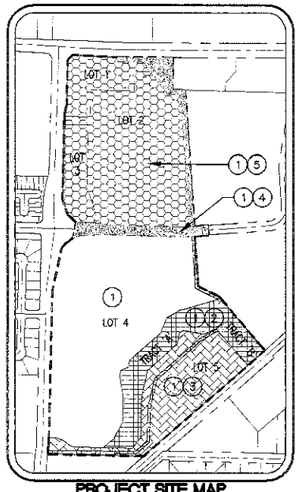

PROJECT SITE MAP
NOT TO SCALE

1. LANGER FARMS/SENTINEL STORAGE ANNEX EROSION AND SEDIMENT CONTROL PLANS
   - EROSION CONTROL PERMIT ENCOMPASSING ALL PROJECTS SHOWN BELOW
   - THIS PERMIT MUST BE OBTAINED AND WORK PERFORMED PRIOR TO PROCEEDING WITH ANY PROJECT.
2. LANGER FARMS REGIONAL PUBLIC STORMWATER FACILITIES (C.O.S. JOB# 4151)
   - PUBLIC STORM SEWER IMPROVEMENTS SOUTH OF SW CENTURY DRIVE
   - PUBLIC STORMWATER FACILITY
   - LANDSCAPING PLANS FOR VEGETATED CORRIDOR AND STORMWATER FACILITY
   - THIS PROJECT TO BE COMPLETED PRIOR TO:
     - ACCEPTANCE OF SW CENTURY DRIVE IMPROVEMENTS
     - OCCUPANCY OF SHERWOOD TOWN CENTER
     - OCCUPANCY OF SENTINEL SELF STORAGE ANNEX
3. SENTINEL SELF STORAGE ANNEX (C.O.S. JOB# 4149)
   - PRIVATE SITE DEVELOPMENTS
   - PRIVATE SITE ACCESS
4. SW CENTURY DRIVE EXTENSION (C.O.S. JOB# 4151)
   - PUBLIC STREET EXTENSION OF SW CENTURY DRIVE
   - PUBLIC IMPROVEMENTS WITHIN SW CENTURY DRIVE RIGHT-OF-WAY
   - PUBLIC STORM SEWER IMPROVEMENTS NORTH OF SW CENTURY DRIVE
   - THIS PROJECT TO BE COMPLETED PRIOR TO OCCUPANCY OF SHERWOOD TOWN CENTER
5. SHERWOOD TOWN CENTER (C.O.S. JOB# 4151)
   - PRIVATE SITE DEVELOPMENTS

DEVELOPER

LANGER GRAMOR, LLC.
CONTACT: MATT GRADY
19767 S.W. 72ND AVENUE SUITE 100
TUALATIN, OR 97062

OWNER

LANGER FAMILY, LLC.
CONTACT: MATT LANGER
14958 SW TUALATIN-SHERWOOD RD
SHERWOOD, OR 97140

CIVIL ENGINEERING SURVEYING FIRM

AKS ENGINEERING & FORESTRY, LLC
CONTACT: ALEX HURLEY
13910 SW GALBREATH DRIVE, SUITE 100
SHERWOOD, OR 97140
PH: 503-925-8799
FAX: 503-925-8969

UTILITY CONTACTS

POWER

PORTLAND GENERAL ELECTRIC
BRIAN BUSWELL
3700 SE 17TH AVENUE
PORTLAND, OR 97202
PH: 503-570-4434

GAS

NW NATURAL
LANCE CHEELEY
220 NW 2ND AVENUE
PORTLAND, OR 97209
PH: 503-226-4211

COMMUNICATIONS

QWEST
8021 SW CAPITOL HILL ROAD
PORTLAND, OR 97219
PH: 503-242-3952

COMMUNICATIONS

VERIZON (FRONTIER)
TAM NGUYEN
PH: 503-641-4463
4155 SW CEDAR HILLS BLVD
BEAVERTON, OR 97005

STREETS

WASHINGTON COUNTY OPERATIONS
1400 SW WALNUT STREET
HILLSBORO, OR 97123-5625
PH: 503-846-7623

GARBAGE/RECYCLING

PRIDE DISPOSAL
13980 SW TUALATIN SHERWOOD RD.
SHERWOOD, OR 97140
PH: 503-625-6177

WATER

CITY OF SHERWOOD, PUBLIC WORKS
22560 SW PINE ST
SHERWOOD, OR 97140
PH: 503-925-2310

SEWER

CITY OF SHERWOOD, PUBLIC WORKS
22560 SW PINE ST
SHERWOOD, OR 97140
PH: 503-925-2310

COMMUNICATIONS

COMCAST CABLE
MARGARET PORTER
10831 SW CASCADE AVENUE
TIGARD, OR 97223
PH: 503-519-8500

RAILROADS

PORTLAND & WESTERN RAILROAD
CONTACT: DENNIS HANNAHS
PH: 541-971-5470

STREETS

CITY OF SHERWOOD, PUBLIC WORKS
22560 SW PINE ST
SHERWOOD, OR 97140
503-925-2310

SITE DESCRIPTION: LOCATED IN THE SOUTHEAST 1/4 OF SECTION 29, TOWNSHIP 2 SOUTH, RANGE 1 WEST, WILLAMETTE MERIDIAN, CITY OF SHERWOOD, WASHINGTON COUNTY, OREGON

SITE LOCATION: EAST OF SW LANGER FARMS PARKWAY, SOUTH OF TUALATIN-SHERWOOD ROAD, NORTH OF SW OREGON STREET

PROJECT PURPOSE: REGIONAL STORMWATER FACILITIES

TOTAL SITE AREA: 3.2 ACRES±

COVER SHEET WITH VICINITY AND SITE MAPS

PERMIT SET
LANGER FARMS REGIONAL PUBLIC STORMWATER FACILITIES
SHERWOOD OREGON
TAX LOT 300
WASHINGTON COUNTY TAX MAP 2S 1 29D

AKS ENGINEERING & FORESTRY
ENGINEERING • PLANNING
SURVEYING • FORESTRY
13910 SW GALBREATH DR., SUITE 100
SHERWOOD, OR 97140
PHONE: (503) 925-8799
FAX: (503) 925-8969

DESIGNED BY:	AHH
DRAWN BY:	RSW
CHECKED BY:	AHH
DRAWING NO.:	STM E2-C000
SCALE:	AS NOTED

PREPARED FOR:
LANGER GRAMOR, LLC.
19767 SW 72ND AVENUE
SUITE 100
TUALATIN, OR 97062

DATE: 6-21-13

REGISTERED PROFESSIONAL ENGINEER
OREGON
JANUARY 15, 2002
ALEXANDER H. HURLEY
RENEWAL DATE: 6/30/15

JOB NUMBER
2929

SHEET
C000

GENERAL NOTES

1. ALL WORK AND MATERIAL SHALL CONFORM TO THESE PLANS AND THE APPLICABLE PROVISIONS OF THE CITY'S DEVELOPMENT CODE, THE CITY'S DESIGN STANDARDS, THE COUNTY'S DEVELOPMENT CODE, THE COUNTY'S DESIGN STANDARDS, THE MOST RECENT EDITION OF THE UNIFORM PLUMBING CODE, THE MOST RECENT EDITION OF THE INTERNATIONAL BUILDING CODE, AND APWA STANDARDS.
2. THE LOCATIONS, DEPTHS AND DESCRIPTIONS OF EXISTING UTILITIES SHOWN ARE COMPILED FROM AVAILABLE RECORDS AND/OR FIELD SURVEYS. THE ENGINEER OR UTILITY COMPANIES DO NOT GUARANTEE THE ACCURACY OR THE COMPLETENESS OF SUCH RECORDS. ADDITIONAL UTILITIES MAY EXIST WITHIN THE WORK AREA.
3. THE LOCATION OF EXISTING UTILITIES SHOWN ON THE PLANS ARE APPROXIMATE AND ARE SHOWN FOR INFORMATION PURPOSES ONLY. THE CONTRACTOR SHALL HAVE ALL UTILITIES LOCATED PRIOR TO COMMENCING CONSTRUCTION. NOTIFY ENGINEER OF ANY DISCREPANCIES PRIOR TO CONSTRUCTION.
4. CONTRACTOR MUST VERIFY ALL EXISTING UTILITIES FOR BOTH VERTICAL ELEVATION AND HORIZONTAL LOCATION PRIOR TO START OF WORK (POTHOLE BEFORE DIGGING IF NECESSARY). SHOULD CONFLICTS ARISE AND REDESIGN OR RELOCATION OF FACILITIES IS NECESSARY, IT SHALL BE DONE AT THE CONTRACTOR'S EXPENSE. CHANGES MUST BE APPROVED BY THE PROJECT ENGINEER IN ADVANCE OF WORK. CONTRACTOR SHALL COORDINATE THE WORK WITH APPLICABLE AGENCIES.
5. TRENCHES OUTSIDE OF THE FUTURE PAVED OR CONCRETE AREAS MAY BE BACKFILLED WITH NATIVE MATERIAL IN ACCORDANCE WITH COMPACTION SPECIFICATIONS FOR APWA CLASS A BACKFILL. CONTRACTOR SHALL CHECK WITH PROJECT ENGINEER AND VERIFY.
6. SUBSEQUENT SETTLEMENT OR CRACKING OF FINISHED SURFACES WITHIN THE WARRANTY PERIOD SHALL BE CONSIDERED TO BE A FAILURE OF THE SUBGRADE, AND REPAIRED IN A MANNER ACCEPTABLE TO AND AT NO COST TO THE CITY OR DEVELOPER.
7. THE CONTRACTOR SHALL CONTROL TRAFFIC THROUGH THE PROJECT SITE IN CONFORMANCE WITH THE LATEST EDITION OF "MANUAL ON UNIFORM TRAFFIC CONTROL DEVICES", "OREGON SUPPLEMENTS", AND CITY REQUIREMENTS. THE CONTRACTOR SHALL AT ALL TIMES MAINTAIN LOCAL ACCESS FOR OWNERS NEAR THE PROJECT SITE. THE CONTRACTOR SHALL PROVIDE A PROJECT-SPECIFIC TRAFFIC CONTROL PLAN, APPROVED BY THE CITY AND COUNTY, AND AVAILABLE ON THE PROJECT SITE.
8. THE CONTRACTOR SHALL HAVE A MINIMUM OF ONE (1) SET OF APPROVED CONSTRUCTION PLANS ON THE JOB SITE AT ALL TIMES DURING THE CONSTRUCTION PHASES.
9. CONTRACTOR SHALL COORDINATE AND SCHEDULE ALL EARTHWORK, TRENCH BACKFILL, ROAD CONSTRUCTION COMPACTION TESTS, AND GEOTECHNICAL REVIEWS WITH THE PROJECT'S GEOTECHNICAL ENGINEER.
10. CONTRACTOR SHALL MAINTAIN BENCHMARKS, PROPERTY CORNERS, AND MONUMENTS. IF SUCH POINTS ARE DISTURBED OR DESTROYED BY CONSTRUCTION ACTIVITIES, THE CONTRACTOR SHALL NOTIFY THE PROJECT ENGINEER, AND IF REQUIRED BY ORS 209, THE CONTRACTOR SHALL PAY FOR THEIR REPLACEMENT BY EMPLOYING A PROFESSIONAL LAND SURVEYOR TO RESET PROPERTY CORNERS AND OTHER SUCH MONUMENTS.
11. PRIOR TO BEGINNING WORK, THE CONTRACTOR SHALL PROVIDE THE FOLLOWING ITEMS:
    - A. LIST OF SUBCONTRACTORS
    - B. PROJECT SCHEDULE
    - C. TRAFFIC CONTROL PLAN
    - D. EMERGENCY CONTACT NAME AND PHONE NUMBER
12. PRIOR TO FINAL ACCEPTANCE AND PAYMENT, THE CONTRACTOR SHALL CLEAN THE WORK SITE AND ADJACENT AREAS OF ANY DEBRIS, DISCARDED ASPHALTIC CONCRETE MATERIAL, OR OTHER ITEMS DEPOSITED BY THE CONTRACTOR'S PERSONNEL DURING THE PERFORMANCE OF THIS CONTRACT.
13. PUBLIC ROADWAYS SHALL NOT BE CLOSED TO TRAFFIC, AT ANY TIME, WITHOUT HAVING FIRST OBTAINED A STREET CLOSURE PERMIT FROM THE CITY AND COUNTY. THE CONTRACTOR IS RESPONSIBLE FOR PROVISION OF TIMELY NOTIFICATION OF TRAFFIC FLOW DISRUPTIONS TO AREA-WIDE EMERGENCY SERVICES AND THE SCHOOL DISTRICT.
14. TRAFFIC CONTROL DEVICES, FLAG PERSONS, ETC., SHALL BE IN PLACE PRIOR TO INITIATION OF CONSTRUCTION WORK AND SHALL BE EFFECTIVELY MAINTAINED. A TRAFFIC CONTROL PLAN SHALL BE SUBMITTED TO THE CITY AND COUNTY FOR APPROVAL PRIOR TO ANY WORK WITHIN EXISTING RIGHT-OF-WAY.
15. THE CONTRACTOR SHALL NOTIFY THE CITY, COUNTY, OR PROJECT ENGINEER (AS APPLICABLE) FORTY-EIGHT (48) HOURS PRIOR TO ANY STAGED INSPECTION.
16. A COPY OF THE PERMIT WITH ALL ATTACHMENTS, A COPY OF THE APPROVED CONSTRUCTION PLANS, AND ALL AMENDMENTS SHALL BE AVAILABLE AT THE PROJECT SITE AT ALL TIMES. ALL WORK SHALL CONFORM TO THE PERMIT TERMS, CONDITIONS/PROVISIONS, CITY-APPROVED CONSTRUCTION PLANS, APPROVED PLAN AMENDMENTS, AND THESE GENERAL CONDITIONS. CHANGES TO ANY OF THE AFORESAID MUST BE APPROVED BY THE PROJECT ENGINEER AND CITY (OR COUNTY AS APPLICABLE), IN ADVANCE OF WORK PERFORMANCE.
17. MAINTENANCE OF THE WORK AREA AND APPROACH ROADS IS THE RESPONSIBILITY OF THE CONTRACTOR. THE WORK AREA AND APPROACH ROADS SHALL BE MAINTAINED IN A CLEAN AND SANITARY CONDITION, FREE FROM OBSTRUCTIONS, HAZARDS, DEBRIS, AND TRASH AT ALL TIMES. A COPY OF THE CONTRACTOR CERTIFICATE OF INSURANCE SHALL BE AVAILABLE AT THE WORK AREA.
18. THE SPREADING OF MUD OR DEBRIS OR STORAGE OF MATERIAL OR EQUIPMENT OF ANY KIND UPON ANY PUBLIC ROADWAY IS STRICTLY PROHIBITED AND VIOLATION SHALL BE CAUSE FOR IMMEDIATE SUSPENSION OF THE PERMIT. THE PROJECT ENGINEER AND/OR CITY OR COUNTY MAY AT ANY TIME ORDER IMMEDIATE CLEAN UP AND STOPPAGE OF WORK TO ACCOMPLISH CLEAN-UP.
19. EFFECTIVE EROSION CONTROL IS REQUIRED. EROSION CONTROL DEVICES MUST BE INSTALLED AND MAINTAINED THROUGHOUT CONSTRUCTION. EROSION CONTROL MEASURES SHALL BE APPROVED BY THE CITY/COUNTY.
20. PROPERTY DISTURBED BY CONSTRUCTION ACTIVITY SHALL BE REPAIRED. GRASS, SHRUBS, FLOWERS, BARK DUST, EXISTING SIGNS, PAVEMENT MARKINGS, MAILBOXES, ETC. DISTURBED BY CONSTRUCTION ACTIVITY SHALL BE RE-ESTABLISHED, REINSTALLED OR REPLACED, WITH LIKE KIND AND MATERIAL.
21. EFFECTIVE DRAINAGE CONTROL IS REQUIRED. DRAINAGE SHALL BE CONTROLLED WITHIN THE SITE AND SHALL BE ROUTED SO THAT ADJACENT PRIVATE PROPERTY, PUBLIC PROPERTY, AND THE RECEIVING SYSTEM ARE NOT ADVERSELY IMPACTED. THE PROJECT ENGINEER AND/OR CITY/COUNTY MAY AT ANY TIME ORDER CORRECTIVE ACTION AND STOPPAGE OF WORK TO ACCOMPLISH EFFECTIVE DRAINAGE CONTROL.
22. A TEMPORARY HARD-SURFACE PATCH (COLD MIX AC OR HOT MIX BASE PAVING) SHALL BE PLACED ON TRENCHES WITHIN EXISTING ROADWAYS AT THE END OF EACH DAY'S WORK. NO TRENCH, ON-SITE OR OFF-SITE, SHALL BE LEFT AT ANY TIME IN AN UNSAFE CONDITION. THE CONTRACTOR IS RESPONSIBLE AND LIABLE FOR HAZARDS OR DAMAGE RESULTING FROM THE PROSECUTION OF THE WORK.
23. WORK PROVIDED FOR UNDER THE PERMIT SHALL INCLUDE REPAIR OF EXISTING FACILITIES (ROADS, DITCHES, ETC.) AS MAY BE NECESSARY, IN THE PROJECT ENGINEER'S OPINION, TO OVERCOME DETERIORATION OR DAMAGE WHICH OCCURRED IN CONJUNCTION WITH THE WORK AUTHORIZED BY THE PERMIT. CORRECTIVE WORK SHALL BE DONE AT THE CONTRACTOR'S EXPENSE.
24. THE PROJECT ENGINEER MAY, AT THEIR DISCRETION, REQUIRE THE PROVISION OF TESTS AND/OR REPORTS FROM THE CONTRACTOR TO VALIDATE CLAIMS OF MATERIAL OR CONSTRUCTION ADEQUACY/COMPLIANCE. SUCH TESTS/REPORTS SHALL BE PROVIDED AT THE CONTRACTOR'S EXPENSE.
25. THE CONTRACTOR IS TO NOTIFY AND COORDINATE WITH UTILITY COMPANIES FOR RELOCATION OF POWER POLES, OVERHEAD WIRES, VAULTS, ETC.
26. THE CONTRACTOR IS TO COORDINATE CONSTRUCTION OF DRY UTILITIES WITH THE UTILITY COMPANIES (POWER, TELEPHONE, GAS, AND CABLE TELEVISION).
27. POWER, TELEPHONE, GAS, AND CABLE TELEVISION TRENCHING AND CONDUITS ARE TO BE INSTALLED PER UTILITY COMPANY REQUIREMENTS WITH PULL WIRE. VERIFY WITH UTILITY COMPANY FOR SIZE AND TYPE OF CONDUIT PRIOR TO CONSTRUCTION.
28. THE PROJECT ENGINEER RESERVES THE RIGHT TO ADJUST GRADES OR ALIGNMENT TO ACCOMMODATE OTHER UTILITIES AS REQUIRED; SUCH ADJUSTMENTS OR REVISIONS SHALL BE REVIEWED BY THE CITY/COUNTY AND APPROVED PRIOR TO COMMENCEMENT OF WORK.
29. PROPERTY AND RIGHT-OF-WAY LINES SHOWN ARE APPROXIMATE. THESE PLANS ARE NOT MEANT TO SERVE BOUNDARY SURVEY PURPOSES.
30. ALL LENGTHS ARE HORIZONTAL DISTANCES AND SHALL BE CONSIDERED APPROXIMATE. PIPE LENGTHS ARE FROM CENTER OF STRUCTURE (MANHOLE) TO CENTER OF STRUCTURE (MANHOLE).
31. THE CONTRACTOR SHALL OBTAIN ALL REQUIRED PERMITS AND LICENSES BEFORE STARTING CONSTRUCTION.
32. THE CONTRACTOR SHALL MAKE PROVISIONS TO KEEP ALL EXISTING UTILITIES IN SERVICE AND PROTECT THEM DURING CONSTRUCTION. CONTRACTOR SHALL IMMEDIATELY REPAIR OR REPLACE ANY DAMAGED UTILITIES USING MATERIALS AND METHODS APPROVED BY THE UTILITY OWNER. NO SERVICE INTERRUPTIONS SHALL BE PERMITTED WITHOUT PRIOR WRITTEN AGREEMENT WITH THE UTILITY PROVIDER.
33. THE CONTRACTOR SHALL REMOVE AND DISPOSE OF TREES, STUMPS, BRUSH, ROOTS, TOPSOIL, AND OTHER MATERIAL IN THE ROADWAY AND WHERE INDICATED ON THE PLANS. MATERIAL SHALL BE DISPOSED OF IN SUCH A MANNER AS TO MEET ALL APPLICABLE REGULATIONS.
34. UPON COMPLETION OF CONSTRUCTION, THE CONTRACTOR SHALL SUBMIT "REDLINE DRAWINGS" TO THE PROJECT ENGINEER. "REDLINE DRAWINGS" DOCUMENT ALL DEVIATIONS AND REVISIONS TO THE APPROVED PLANS; THEY ALSO RECORD A DESCRIPTION OF CONSTRUCTION MATERIALS ACTUALLY USED (PIPE MATERIAL, ETC.).
35. THE CONTRACTOR SHALL PERFORM ALL WORK NECESSARY TO COMPLETE THIS PROJECT IN ACCORDANCE WITH THE PLANS AND SPECIFICATIONS INCLUDING SUCH INCIDENTALS, AS MAY BE NECESSARY TO MEET THE INTENT OF THE PROJECT CONTRACT DOCUMENTS, APPLICABLE AGENCY REQUIREMENTS, AND OTHER WORK AS NECESSARY TO PROVIDE A COMPLETE PROJECT.
36. THERE SHALL BE NO ALTERATION OR VARIANCE FROM THE APPROVED PLANS WITHOUT APPROVAL OF THE PROJECT ENGINEER.
37. THE CONTRACTOR SHALL MAINTAIN AND COORDINATE ACCESS TO ALL AFFECTED PROPERTIES.
38. IF GROUND WATER SPRINGS ARE ENCOUNTERED DURING CONSTRUCTION, THE CONTRACTOR SHALL IMMEDIATELY CONTACT THE PROJECT ENGINEER. THE PROJECT ENGINEER SHALL DIRECT THE CONTRACTOR TO TAKE MEASURE TO ENSURE THAT THE WATER IS NOT CONVEYED THROUGH UTILITY TRENCHES AND THE NATURAL FLOW PATH OF THE SPRING IS ALTERED AS LITTLE AS PRACTICABLE. THE CONTRACTOR SHALL SUBMIT INFORMATION SUMMARIZING THE SITUATION TO THE CITY. IMPACTS AND MITIGATION SHALL BE ADDRESSED FOR CITY APPROVAL.
39. ANY INSPECTION BY THE CITY, COUNTY, STATE, FEDERAL AGENCY, OR PROJECT ENGINEER SHALL NOT, IN ANY WAY, RELIEVE THE CONTRACTOR FROM ANY OBLIGATION TO PERFORM THE WORK IN COMPLIANCE WITH THE APPLICABLE PLANS CODES, REGULATIONS, STANDARDS, AND PROJECT CONTRACT DOCUMENTS.
40. SAW CUT STRAIGHT MATCH LINES WHERE EXISTING PAVEMENT MEETS NEW PAVEMENT. SAND AND SEAL JOINT (TYPICAL).
41. EXISTING BURIED UTILITIES, WHICH ARE TO BE ABANDONED, SHOULD BE REMOVED UNLESS NOTED ON THE APPROVED PLANS.
42. DUST SHALL BE CONTROLLED WITHIN THE DEVELOPMENT DURING CONSTRUCTION AND SHALL NOT BE PERMITTED TO DRIFT ONTO ADJACENT PROPERTIES.
43. CONTRACTOR SHALL WORK TO PRESERVE ALL TEMPORARY SURVEY CONTROL POINTS, TEMPORARY BENCHMARKS, TEMPORARY GRADE STAKES, AND OTHER REFERENCE POINTS FOR AS LONG AS THEY ARE NEEDED FOR CONSTRUCTION ACTIVITIES.
44. CONTRACTOR SHALL FOLLOW OSHA REQUIREMENTS.
45. ALL TRENCHES SHALL BE PROPERLY SHORED AND BRACED TO PREVENT CAVING.
46. NO TRENCHES WILL BE ALLOWED TO REMAIN OPEN OVERNIGHT. ALL TRENCHES SHALL BE COVERED WITH STEEL PLATES OR FILLED IN AT NIGHT.
47. NOISE SHALL BE KEPT AT THE MINIMUM LEVEL POSSIBLE DURING CONSTRUCTION. THE CONTRACTOR SHALL AGREE TO AGGRESSIVELY INSURE ALL VEHICLES WORKING ON THE DEVELOPMENT SHALL HAVE ADEQUATE AND FULLY FUNCTIONING SOUND SUPPRESSION DEVICES INSTALLED AND MAINTAINED AT ALL TIMES.
48. THE CONTRACTOR SHALL CONSULT THE FIRE MARSHAL ON THE NEED FOR A FIRE PREVENTION AND CONTROL PLAN DURING THE PERIOD OF SITE DEVELOPMENT. IF THE FIRE MARSHAL DETERMINES THE NEED FOR SUCH A PLAN, THE CONTRACTOR SHALL PREPARE SUCH PLAN THE REQUIREMENTS AND SPECIFICATIONS OF THE FIRE MARSHAL AND SHALL FILE A COPY WITH THE CITY.
49. THE CONTRACTOR MUST BE LICENSED BY THE STATE OF OREGON.
50. AT LEAST ONE COMPACTION TEST SHALL BE PERFORMED FOR EVERY 200 LINEAR FEET OF UTILITY TRENCH BACKFILLED AND EVERY THREE FEET OF DEPTH, OR AS DIRECTED BY THE ENGINEER OF RECORD.
51. BEFORE INITIATING ANY CONSTRUCTION ACTIVITY, THERE SHALL BE A PRE-CONSTRUCTION CONFERENCE BETWEEN PRINCIPAL REPRESENTATIVES OF THE ENGINEER, CONTRACTOR, DEVELOPER, CITY OF SHERWOOD, AND WASHINGTON COUNTY IN THE CITY OFFICES, WHEN THE FINAL PLANS ARE READY FOR APPROVAL.

GRADING NOTES:

1. THE CONTRACTOR SHALL BE RESPONSIBLE FOR MAKING THE NECESSARY ARRANGEMENTS FOR COMPACTION TESTING AND FOR SUPPLYING THE RESULTS TO THE PROJECT ENGINEER.
2. SITE PREPARATION MUST INCLUDE THE REMOVAL OF VEGETATION, NON-COMPLYING FILL, TOPSOIL, OR OTHER UNSUITABLE MATERIAL PRIOR TO PLACEMENT OF THE FILL.
3. NO CUT OR FILL SHALL EXCEED A GRADE OF 2 HORIZONTAL TO 1 VERTICAL UNLESS APPROVED BEFOREHAND BY THE PROJECT ENGINEER.
4. APPROPRIATE BENCHING OF FILLS IS REQUIRED FOR FILLS OVER 5 FEET IN HEIGHT ON SLOPES IN EXCESS OF 5 HORIZONTAL TO 1 VERTICAL. BENCHING MUST BE DONE AS PER THE APPROVED PLANS. CONTACT THE PROJECT'S GEOTECHNICAL ENGINEER FOR ADDITIONAL INFORMATION ON FILL SLOPES AND BENCHING.
5. CUT AND FILL SLOPES SHALL BE PROTECTED FROM EROSION. SUCH CONTROL MAY CONSIST OF APPROPRIATE REVEGETATION OR OTHER ACCEPTABLE MEANS AND METHODS. EROSION CONTROL MEASURES SHALL BE IN PLACE PRIOR TO EARTHWORK OR SITE STRIPPING.
6. THE CONTRACTOR SHALL COORDINATE WITH THE PROJECT ENGINEER AND THE PROJECT'S GEOTECHNICAL ENGINEER FOR REQUIRED INSPECTIONS AT THE FOLLOWING STAGES OF CONSTRUCTION:
    - A. INSPECTION OF SITE STRIPPING, PRIOR TO FILL PLACEMENT. EROSION CONTROL MEASURES SHALL BE IN PLACE AT THIS TIME.
    - B. IN PREPARATION OF BENCH CONSTRUCTION PRIOR TO FILL PLACEMENT.
    - C. AFTER PLACEMENT OF EACH 500 YARDS OF FILL.
    - D. AFTER THE MAJORITY OF FILL HAS BEEN PLACED AND IS IN "ROUGH" GRADE BUT PRIOR TO FINAL GRADING.
    - E. WHEN FINAL GRADING IS COMPLETE.
7. AREAS TO RECEIVE FILL MATERIALS SHALL BE PREPARED BY REMOVING ALL ORGANIC AND UNSUITABLE MATERIALS AND PROOF ROLLING. BENCHING IS REQUIRED ON FILLS WHERE THE EXISTING GROUND SLOPE EXCEEDS 5 HORIZONTAL TO 1 VERTICAL. BENCHING SHALL BE IN ACCORDANCE WITH PROJECT GEOTECHNICAL ENGINEER'S RECOMMENDATIONS. MATERIAL IN SOFT SPOTS WITHIN PROPOSED BUILDING, PAVED, OR SIDEWALK AREAS SHALL BE REMOVED TO THE DEPTH REQUIRED (AS DIRECTED BY THE PROJECT ENGINEER OR THE PROJECT'S GEOTECHNICAL ENGINEER) TO PROVIDE A FIRM FOUNDATION AND SHALL BE REPLACED WITH SUITABLE BACKFILL. FILLS ARE TO BE CONSTRUCTED IN HORIZONTAL LIFTS NOT TO EXCEED 8 INCHES LOOSE MEASURE.
8. FINISHED GRADE CONTOURS SHOWN ARE APPROXIMATE. FINAL GRADING ELEVATIONS ARE ONE-FOOT ±. THE PROJECT ENGINEER MAY ADJUST FINISHED GRADE AS REQUIRED DURING CONSTRUCTION. FINISHED GRADE CONTOURS TYPICALLY REPRESENT TOP OF PAVEMENT IN PAVED AREAS, TOP OF CONCRETE IN SIDEWALK AREAS, AND FINISHED GRADE (TOP OF CUT SURFACE OR TOP OF STRUCTURAL FILL) IN ALL OTHER AREAS.
9. IF SPRINGS OR GROUNDWATER ARE ENCOUNTERED DURING CONSTRUCTION, THE CONTRACTOR SHALL NOTIFY THE PROJECT'S GEOTECHNICAL ENGINEER AND PROJECT ENGINEER OF THE CONDITIONS FOUND AND COORDINATE THE ACTIVITIES IN A MANNER THAT WILL ALLOW TIME TO REVIEW THE SITUATION AND PREPARE A PLAN TO PROPERLY MITIGATE THE WATER ENCOUNTERED.
10. STRIPPING DEPTH SHALL BE AS REQUIRED BY THE PROJECT'S GEOTECHNICAL ENGINEER (12"±). STRIPPINGS SHALL BE HAULED OFF AND DISPOSED OF OFF-SITE, UNLESS OTHERWISE APPROVED BY THE PROJECT ENGINEER, PROJECT'S GEOTECHNICAL ENGINEER, AND DEVELOPER.
11. THE CONTRACTOR SHALL HAVE A COPY OF THE GEOTECHNICAL ENGINEER'S REPORT. ALL WORK SHALL BE PERFORMED IN ACCORDANCE WITH THE REPORT.
12. THESE PLANS AND SPECIFICATIONS ASSUME "DRY WEATHER" CONSTRUCTION. ADDITIONAL MEASURES MAY BE REQUIRED FOR "WET WEATHER" CONSTRUCTION.
13. ALL GRADING SHALL BE IN CONFORMANCE WITH THE MOST RECENT EDITION OF THE INTERNATIONAL BUILDING CODE (IBC).
14. ALL STRUCTURAL FILL SHALL MEET THE REQUIREMENTS OF THE PROJECT'S GEOTECHNICAL ENGINEER AND THE CITY OF SHERWOOD. THE MINIMUM COMPACTION SHALL BE 95% PER AASHTO T-99 (ASTM D 698).
15. ALL TRENCH SPOILS SHALL BE UTILIZED ON-SITE AS STRUCTURAL FILL, UNLESS OTHERWISE DIRECTED BY THE PROJECT ENGINEER AND DEVELOPER. ALTERNATIVELY, TRENCH SPOILS MAY BE TRUCKED OFF-SITE IF APPROVED BY THE PROJECT ENGINEER, PROJECT'S GEOTECHNICAL ENGINEER, AND DEVELOPER.
16. PROJECT GRADING LIMITS SHALL BE WITHIN THE PROJECT'S PROPERTY BOUNDARY AND/OR STREET RIGHT-OF-WAY, UNLESS OTHERWISE SHOWN ON PLANS. NO GRADING SHALL BE CONDUCTED IN WETLANDS OR OTHER ENVIRONMENTALLY SENSITIVE AREAS UNLESS SPECIFICALLY SHOWN ON THE APPROVED PLANS.
17. THE IDENTIFICATION OR REMOVAL OF UNSUITABLE MATERIAL SHALL BE DONE WITH CONSULTATION WITH THE PROJECT ENGINEER OR PROJECT'S GEOTECHNICAL ENGINEER.
18. REMOVE AND DISPOSE OF ALL ORGANIC AND/OR UNSUITABLE MATERIALS, INCLUDING TREES, STUMPS, ROOTS, BRUSH, AND GRASS IN SUCH A MANNER TO MEET AL APPLICABLE REGULATIONS. ON-SITE DISPOSAL SHALL BE OF AS DETERMINED BY THE PROJECT ENGINEER OR PROJECT'S GEOTECHNICAL ENGINEER.
19. THE CONTRACTOR SHALL PROTECT ALL TREES NOT SPECIFICALLY SHOWN TO BE REMOVED ON APPROVED PLANS.

APPROVED
CONSTRUCTION PLANS
(See cover sheet approval for any conditions)
City of Sherwood
Engineering Division
Date: 7/1/13

20. GRADE THE SITE TO THE ELEVATION SHOWN ON THE DRAWING WITH THE NECESSARY ADJUSTMENTS TO ACCOMMODATE THE FINISHES AS SPECIFIED. WHERE APPLICABLE, SHAPE FUTURE PAVED AREAS PER THE PLANS TO A SUBGRADE ELEVATION THAT WILL ACCOMMODATE FUTURE BASE ROCK AND PAVING.
21. STRAIGHT GRADES SHALL BE RUN BETWEEN FINISH GRADE AND/OR FINISH CONTOUR LINES SHOWN, UNLESS OTHERWISE NOTED. FINISH GRADES ARE TO DRAIN AS INDICATED ON THE PLANS. ROUGH GRADING SHALL BE FINISHED BY BLADING AND RAKING TO REASONABLE SMOOTH CONTOURS WITH GENTLE TRANSITIONS.
22. AREAS TO RECEIVE FILL MATERIALS SHALL BE PREPARED BY REMOVING ALL ORGANIC AND UNSUITABLE MATERIALS AND "PROOF ROLLED". BENCHING MAY BE REQUIRED. MATERIAL IN SOFT SPOTS SHALL BE REMOVED TO THE DEPTH REQUIRED (AS DIRECTED BY THE PROJECT ENGINEER OR THE PROJECT'S GEOTECHNICAL ENGINEER) AND SHALL BE REPLACED WITH SUITABLE BACKFILL.
23. THE CONSTRUCTION OF STRUCTURAL FILLS AND/OR EXCAVATIONS CONNECTED SHALL BE IN ACCORDANCE WITH THE WRITTEN RECOMMENDATIONS MADE BY THE PROJECT'S GEOTECHNICAL ENGINEER.
24. COMPACTION TESTS AND REPORTS FOR EACH LOT SHALL BE CONDUCTED BY AND APPROVED TESTING LABORATORY, TEST FREQUENCY SHALL BE PER THE PROJECT ENGINEER OR PROJECT'S GEOTECHNICAL ENGINEER. TESTING TO COMMENCE WITH FILL ACTIVITIES AND AS A MINIMUM, ONE TEST WILL BE TAKEN FOR EVERY 500 CUBIC YARDS PLACED.
25. IF DUSTY CONDITIONS EXIST, THE PERMITTE SHALL APPLY A FINE SPRAY OF WATER ON THE SURFACE TO CONTROL THE DUST.
26. ENGINEERED FILL IN THE BUILDING ENVELOPE SHALL BE CERTIFIED BY THE GEOTECHNICAL ENGINEER. THIS CERTIFICATION SHALL BE SENT TO THE CITY BUILDING OFFICIAL UPON SUBMISSION OF THE BUILDING PERMIT IF IT HAS NOT ALREADY BEEN RECEIVED BY THE CITY BUILDING OFFICIAL.
27. ALL CONSTRUCTION TO BE IN CONFORMANCE WITH THE PROJECT GEOTECHNICAL ENGINEER'S RECOMMENDATIONS. THE "GEOTECHNICAL ENGINEERING REPORT OFFSITE ROADWAY AND UTILITY IMPROVEMENTS PROPOSED SHERWOOD TOWN CENTER" BY TERRACON CONSULTANTS, INC. IS TO BE CONSIDERED PART OF THESE PLANS.

STORMWATER DRAINAGE CONSTRUCTION NOTES

PIPE AND TRENCH NOTES – GENERAL

1. TRENCH EXCAVATION, PIPE BEDDING AND PIPE ZONE MATERIAL, TRENCH BACKFILL, AND TRENCH COMPACTION SHALL CONFORM TO CITY STANDARD DETAILS, CODES, AND DRAWINGS, AS APPLICABLE.
2. SUBSEQUENT SETTLEMENT OF THE FINISHED SURFACE WITHIN THE WARRANTY PERIOD SHALL BE CONSIDERED TO BE A RESULT OF IMPROPER COMPACTION AND SHALL BE PROMPTLY REPAIRED BY THE CONTRACTOR AT NO EXPENSE TO THE OWNER.
3. PAVEMENT RESURFACING, WHERE REQUIRED, SHALL CONFORM TO CITY CODES, STANDARD DETAILS, AND DRAWINGS.
4. ALL MANHOLE RIMS NOT IN PAVEMENT AREAS OR ROADWAY RIGHT-OF-WAY SHALL BE SET SIX INCHES (6") ABOVE FINISHED GRADE AND SHALL HAVE A CAST IRON MANHOLE FRAME AND COVER. COVER SHALL BE BOLTED DOWN WITH A MINIMUM OF TWO STAINLESS STEEL BOLTS.
5. MANHOLE WALLS SHALL BE PRECAST REINFORCED CONCRETE MANHOLES OF THE SIZE REQUIRED PER MANUFACTURER'S RECOMMENDATIONS FOR THE PIPE SIZES AND NUMBER OF OPENINGS. LADDERS OR STEPS ARE REQUIRED ON ALL MANHOLES IN CONFORMANCE WITH APPROPRIATE CODES, UNLESS OTHERWISE NOTED ON THE APPROVED PLANS.
6. ALL MATERIALS INSPECTIONS AND TESTS ARE TO BE IN ACCORDANCE WITH CWS, TVWD, CITY, COUNTY, STATE, AND FEDERAL STANDARD SPECIFICATIONS, AS APPLICABLE. ALL SECTIONS FAILING TO PASS THE REQUIRED TESTS AND INSPECTIONS SHALL BE LOCATED AND REPAIRED. AFTER REPAIR, THESE SECTIONS SHALL BE RE-TESTED AND INSPECTED UNTIL FOUND ACCEPTABLE BY THE INSPECTOR AND PROJECT ENGINEER. INSPECTOR SHALL BE PRESENT FOR ALL TESTING.
7. PRIOR TO TESTING, PIPE SHALL BE CLEAR OF ANY DEBRIS, ROCKS, GRAVEL, SAND, SILT AND OTHER FOREIGN MATERIAL.
8. TRENCH BACKFILL SHALL BE 3/4"-0" CRUSHED ROCK.

STORM DRAINAGE NOTES – GENERAL

1. STORM DRAINAGE PIPE MATERIAL SHALL BE AS NOTED ON PLANS AND CONFORM TO THE REQUIREMENTS BELOW.
    - A) STORM DRAINAGE PIPE WITH A MINIMUM THREE-FEET OF COVER FROM FINISHED GRADE SHALL BE RIBBED POLYVINYL CHLORIDE (PVC) SEAMLESS, CONFORMING TO ASTM F794 UNLESS OTHERWISE SPECIFIED ON THE PLANS.
    - B) CORRUGATED POLYETHYLENE PIPE (ADS N-12 OR EQUIVALENT) SHALL BE DOUBLE WALL WITH WATERTIGHT JOINTS AND FITTINGS. CORRUGATED POLYETHYLENE PIPE SHALL MEET THE SPECIFICATIONS OF AASHTO M252 FOR PIPE DIAMETER OF 10" DIAMETER OR LESS AND AASHTO M294 OR ASTM F2306 FOR PIPE DIAMETERS OF 12" THROUGH 60". SPIRAL PIPE IS NOT ACCEPTABLE.
    - C) STORM DRAINAGE PIPE WITH LESS THAN THREE FEET OF COVER FROM FINISHED GRADE SHALL BE PVC, AWWA C900 OR AWWA C905, CLASS 100 DR25, OR DUCTILE IRON (DI) WITH CLASS 52 WALL THICKNESS.
2. ALL SERVICE STUB OUTS SHALL BE A MINIMUM OF THREE FEET (3') BEYOND EASEMENT OR RIGHT-OF-WAY LINE. SERVICE STUB OUTS TO BE A MINIMUM OF 4-INCH DIAMETER PIPE AT MINIMUM SLOPE OF 2%. MAGNETIC TAPE SHALL BE INSTALLED WITH SERVICE STUB OUTS.
3. ALL STORM DRAINAGE LINES SHALL BE VIDEO INSPECTED BY THE CONTRACTOR AND HAVE A MANDREL PASSED THROUGH TO CHECK DEFLECTION. TESTING AND INSPECTION SHALL BE IN ACCORDANCE WITH ALL APPLICABLE CODES.
4. CITY OF SHERWOOD REQUIRES VIDEO INSPECTION TO OCCUR AFTER THE PLACEMENT OF ASPHALT. CITY RECOMMENDS THAT CONTRACTOR/DEVELOPER VIDEO PRIOR TO PLACEMENT OF ASPHALT TO VERIFY THAT LINES ARE ACCEPTABLE.
5. ALL STORM DRAINAGE LINES SHALL BE AIR TESTED. ALL MANHOLES SHALL BE HYDROSTATICALLY TESTED OR VACUUM TESTED. TESTING AND INSPECTION SHALL BE IN ACCORDANCE WITH ALL APPLICABLE CODES.
6. ALL TESTING SHALL BE WITNESSED BY THE CITY.

GENERAL NOTES

PERMIT SET
LANGER FARMS REGIONAL
PUBLIC STORMWATER FACILITIES
SHERWOOD OREGON
TAX LOT 300 WASHINGTON COUNTY TAX MAP 2S 1 29D

AKS ENGINEERING & FORESTRY
ENGINEERING · PLANNING
SURVEYING · FORESTRY
13910 SW GALBREATH DR., SUITE 100
SHERWOOD, OR 97140
PHONE: (503) 925-8799
FAX: (503) 925-8969

DESIGNED BY:	AHH
DRAWN BY:	RSW
CHECKED BY:	AHH
DRAWING NO.:	STM E2-C000
SCALE:	AS NOTED

PREPARED FOR:
LANGER GRAMOR, LLC.
19767 SW 72ND AVENUE
SUITE 100
TUALATIN, OR 97062

DATE: 6-21-13

REGISTERED PROFESSIONAL ENGINEER 56559PE
OREGON
JANUARY 15, 2002
ALEXANDER H. HURLEY
RENEWAL DATE: 6/30/15

JOB NUMBER
2929

SHEET
C001

NOTES:

1. INFORMATION SHOWN IS BASED ON DIGITAL INFORMATION PROVIDED BY OTHERS (INCLUDING CES NW AND HDJ DESIGN GROUP). AKS ENGINEERING & FORESTRY MAKES NO GUARANTEE THAT THE UTILITIES SHOWN REPRESENT THE ONLY UTILITIES IN THE AREA. CONTRACTORS ARE RESPONSIBLE FOR VERIFYING ALL EXISTING CONDITIONS PRIOR TO BEGINNING CONSTRUCTION.
2. PORTIONS OF SITE TOPOGRAPHY ARE PER A SURVEY BY CES NW (CES NW JOB NO. 2723) AND ARE LABELED. THE REMAINING TOPOGRAPHIC DATA IS PER DRAWINGS PROVIDED ON 12/05/11 BY HDJ. THERE IS A PORTION OF LANGER FARMS PARKWAY WHERE ADDITIONAL DRY UTILITIES WERE TIED BY AKS AND HAVE BEEN NOTED.
3. VERTICAL DATUM: ELEVATIONS ARE BASED ON WASHINGTON COUNTY BENCHMARK NO. 103, A BRASS DISK IN CONCRETE AT THE SW CORNER OF THE INTERSECTION OF SW TUALATIN-SHERWOOD ROAD AND THE RAILROAD CROSSING, APPROXIMATELY 1.1 MILE EAST OF SIX CORNERS. WITH A NGVD 29 ELEVATION OF 171.38 FEET.
4. THIS MAP DOES NOT CONSTITUTE A PROPERTY BOUNDARY SURVEY.
5. CONTOUR INTERVAL IS 1 FOOT.
6. ALL TREES SHOWN ARE APPROXIMATE LOCATION AND HAVE NOT BEEN VERIFIED AT THIS TIME.

CURVE TABLE				
CURVE	RADIUS	LENGTH	DELTA	CHORD
C2	485.00'	72.56'	8°37'09"	N5°40'21"E 72.69'
C3	281.85'	82.54'	16°46'45"	S9°45'09"W 82.25'

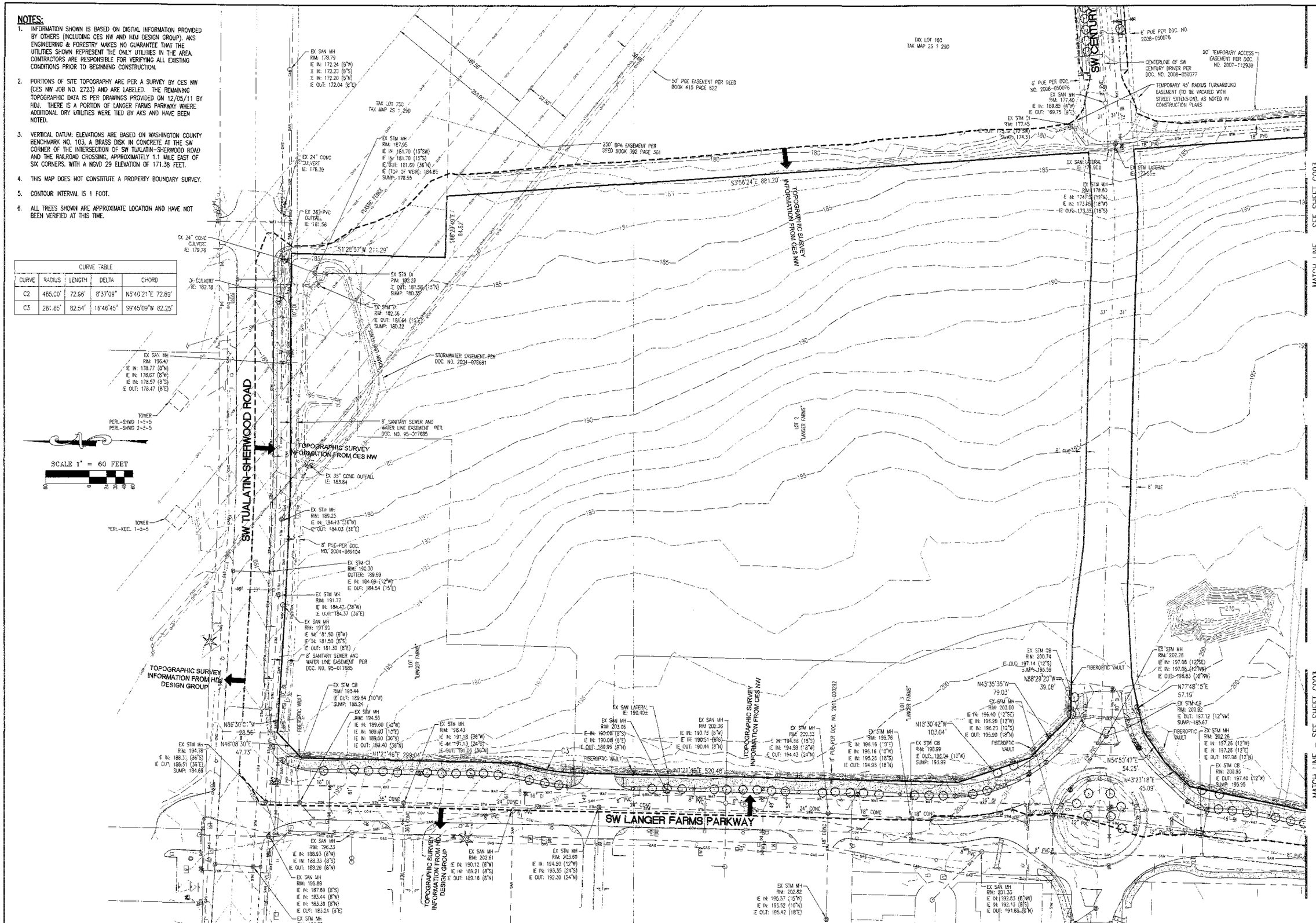

EXISTING CONDITIONS PLAN NORTH

PERMIT SET
LANGER FARMS REGIONAL PUBLIC STORMWATER FACILITIES
OREGON
WASHINGTON COUNTY TAX MAP 2S 1 29D
TAX LOT 300

AKS ENGINEERING & FORESTRY
ENGINEERING · PLANNING
SURVEYING · FORESTRY
13910 SW GALBREATH DR., SUITE 100
SHERWOOD, OR 97140
PHONE: (503) 925-8799
FAX: (503) 925-8969

DESIGNED BY:	AHH
DRAWN BY:	RSW
CHECKED BY:	AHH
DRAWING NO:	STM E2-C002
SCALE:	AS NOTED

PREPARED FOR:
LANGER GRAMOR, LLC.
19767 SW 72ND AVENUE
SUITE 100
TUALATIN, OR 97062

DATE: 6-21-13

REGISTERED PROFESSIONAL LAND SURVEYOR
OREGON JULY 15, 2003 ALEXANDER H. HURLEY 56539LS
RENEWS: 6/30/15

JOB NUMBER 2929

SHEET C002

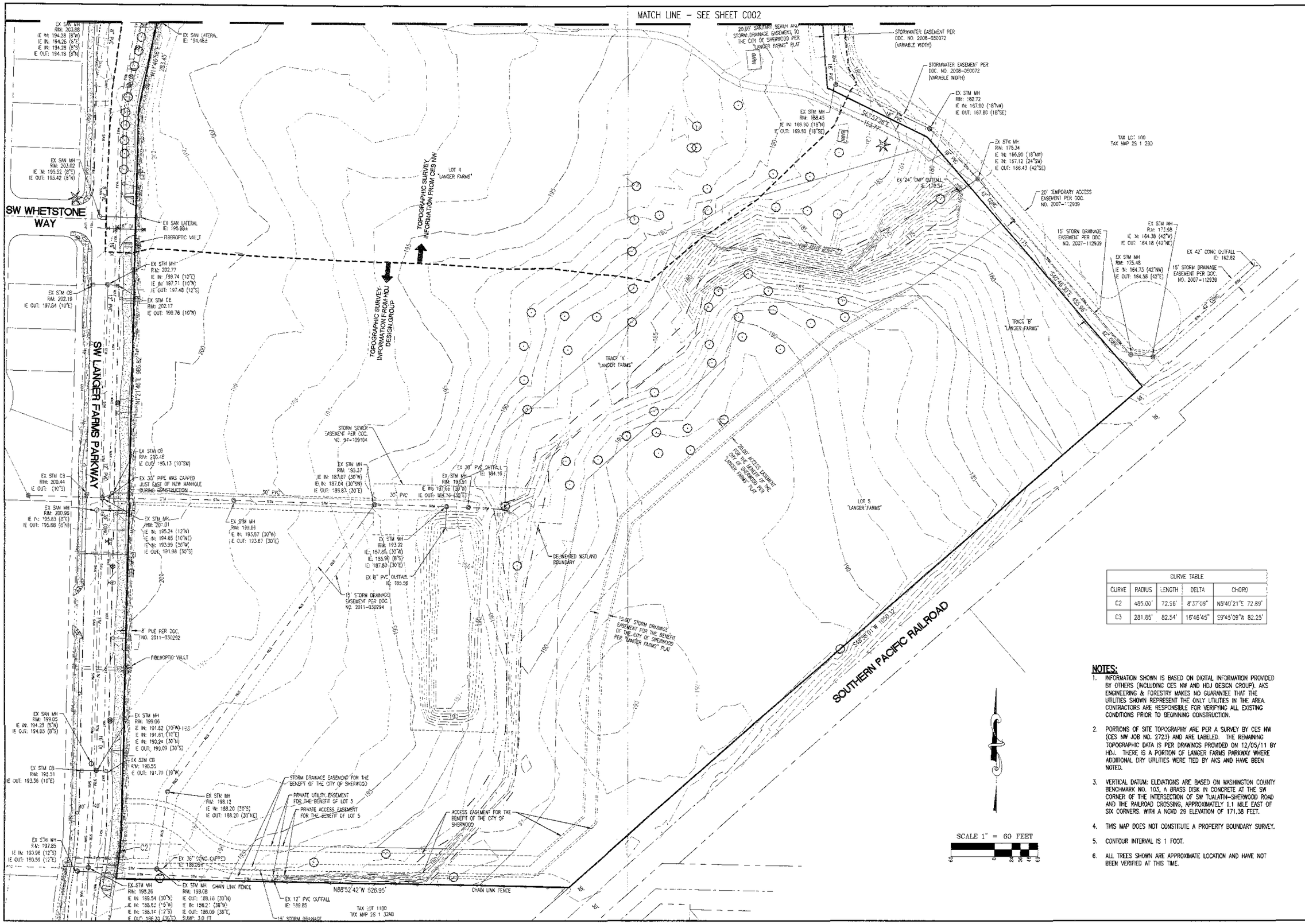

CURVE TABLE				
CURVE	RADIUS	LENGTH	DELTA	CHORD
C2	485.00'	72.66'	8°37'09"	N5°40'21"E 72.89'
C3	281.85'	82.54'	16°46'45"	S9°45'09"W 82.25'

NOTES:

1. INFORMATION SHOWN IS BASED ON DIGITAL INFORMATION PROVIDED BY OTHERS (INCLUDING CES NW AND HDJ DESIGN GROUP). AKS ENGINEERING & FORESTRY MAKES NO GUARANTEE THAT THE UTILITIES SHOWN REPRESENT THE ONLY UTILITIES IN THE AREA. CONTRACTORS ARE RESPONSIBLE FOR VERIFYING ALL EXISTING CONDITIONS PRIOR TO BEGINNING CONSTRUCTION.
2. PORTIONS OF SITE TOPOGRAPHY ARE PER A SURVEY BY CES NW (CES NW JOB NO. 2723) AND ARE LABELED. THE REMAINING TOPOGRAPHIC DATA IS PER DRAWINGS PROVIDED ON 12/05/11 BY HDJ. THERE IS A PORTION OF LANGER FARMS PARKWAY WHERE ADDITIONAL DRY UTILITIES WERE TIED BY AKS AND HAVE BEEN NOTED.
3. VERTICAL DATUM: ELEVATIONS ARE BASED ON WASHINGTON COUNTY BENCHMARK NO. 103, A BRASS DISK IN CONCRETE AT THE SW CORNER OF THE INTERSECTION OF SW TUALATIN-SHERWOOD ROAD AND THE RAILROAD CROSSING, APPROXIMATELY 1.1 MILE EAST OF SIX CORNERS. WITH A NGVD 29 ELEVATION OF 171.38 FEET.
4. THIS MAP DOES NOT CONSTITUTE A PROPERTY BOUNDARY SURVEY.
5. CONTOUR INTERVAL IS 1 FOOT.
6. ALL TREES SHOWN ARE APPROXIMATE LOCATION AND HAVE NOT BEEN VERIFIED AT THIS TIME.

EXISTING CONDITIONS PLAN SOUTH

PERMIT SET
LANGER FARMS REGIONAL PUBLIC STORMWATER FACILITIES
OREGON
SHERWOOD
WASHINGTON COUNTY TAX MAP 2S 1 29D
TAX LOT 300

AKS ENGINEERING & FORESTRY
ENGINEERING · PLANNING
SURVEYING · FORESTRY
13910 SW GALBREATH DR., SUITE 100
SHERWOOD, OR 97140
PHONE: (503) 925-8799
FAX: (503) 925-8969

DESIGNED BY: AHH
DRAWN BY: RSW
CHECKED BY: AHH
DRAWING NO.: STM_E2-C002
SCALE: AS NOTED

PREPARED FOR:
LANGER CRAMOR, LLC.
19767 SW 72ND AVENUE
SUITE 100
TUALATIN, OR 97062

DATE: 6-21-13

REGISTERED PROFESSIONAL LAND SURVEYOR
OREGON
JULY 15, 2003
ALEXANDER H. HURLEY
58539LS
RENEWS: 6/30/15

JOB NUMBER
2929

SHEET
C003

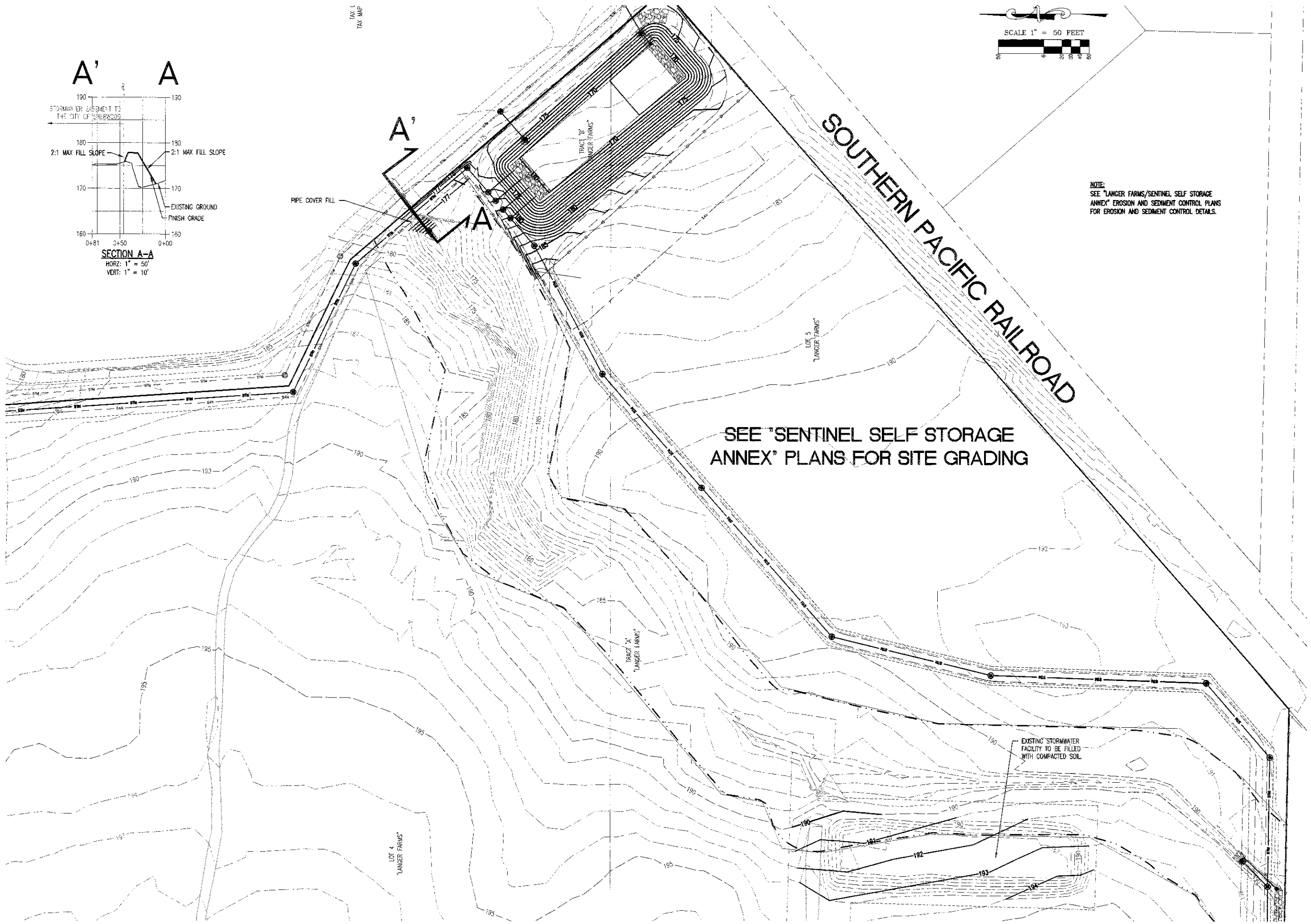

GRADING PLAN

PERMIT SET
LANGER FARMS REGIONAL PUBLIC STORMWATER FACILITIES
SHERWOOD OREGON
TAX LOT 300
WASHINGTON COUNTY TAX MAP 2S 1 29D

AKS ENGINEERING & FORESTRY
ENGINEERING · PLANNING
SURVEYING · FORESTRY
13910 SW GALBREATH DR.,
SUITE 100
SHERWOOD, OR 97140
PHONE: (503) 925-8799
FAX: (503) 925-8869

DESIGNED BY:	AHH
DRAWN BY:	RSW
CHECKED BY:	AHH
DRAWING NO.:	STM E1-C070
SCALE:	AS NOTED

PREPARED FOR:
LANGER GRAMOR, LLC.
19767 SW 72ND AVENUE
SUITE 100
TUALATIN, OR 97062

DATE: 6-21-13

REGISTERED PROFESSIONAL ENGINEER
65559PE
OREGON
JANUARY 19, 2012
ALEXANDER H. HURLEY
RENEWAL DATE: 6/30/15

JOB NUMBER
2929

SHEET
C070

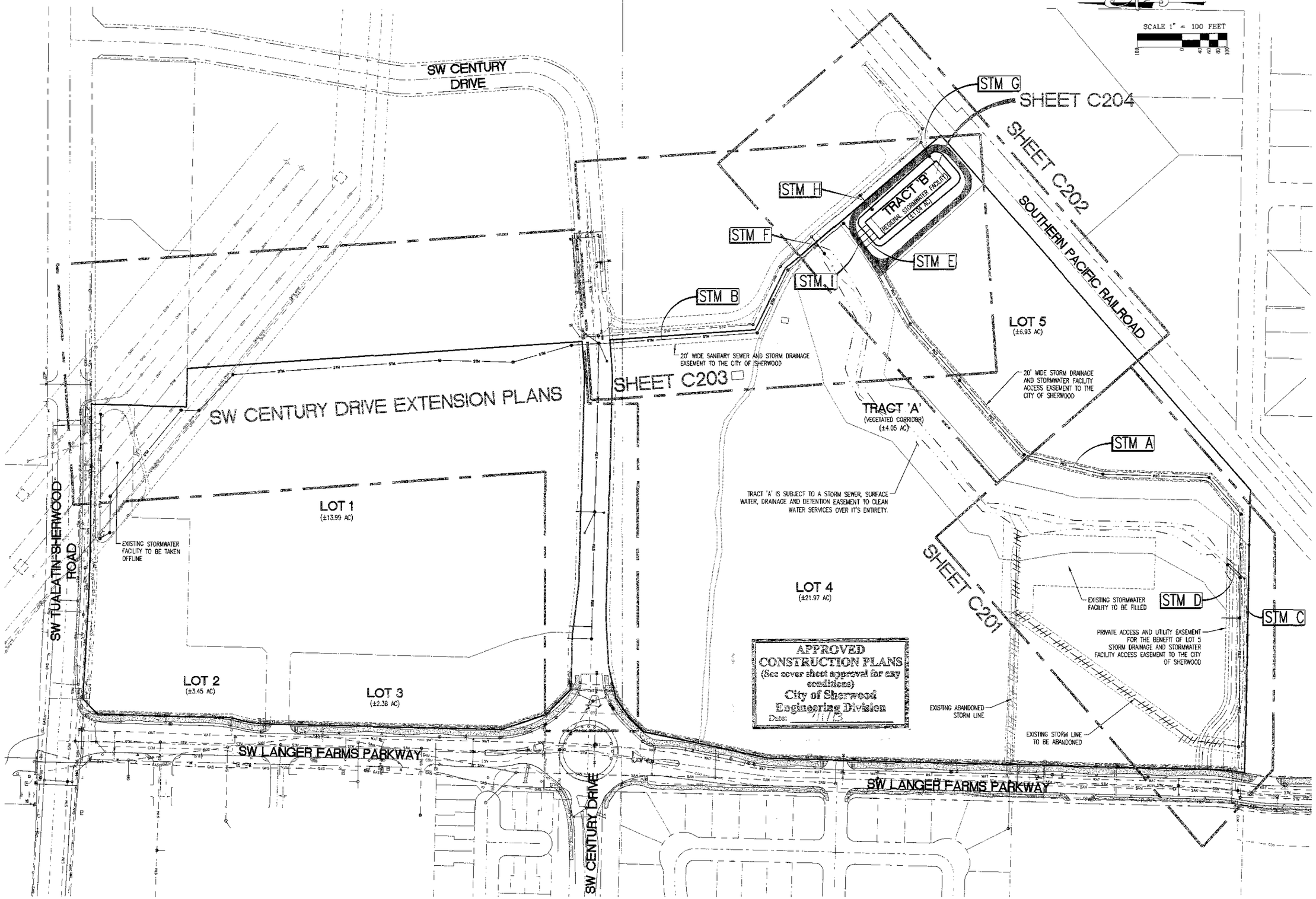

COMPOSITE UTILITY PLAN AND SHEET INDEX

PERMIT SET

LANGER FARMS REGIONAL PUBLIC STORMWATER FACILITIES

SHERWOOD, OREGON

TAX LOT 300

WASHINGTON COUNTY TAX MAP 2S 1 28D

AKS ENGINEERING & FORESTRY

ENGINEERING · PLANNING
SURVEYING · FORESTRY

13910 SW GALBREATH DR.,
SUITE 100
SHERWOOD, OR 97140
PHONE: (503) 925-8799
FAX: (503) 925-8889

DESIGNED BY:	AHH
DRAWN BY:	RSW
CHECKED BY:	AHH
DRAWING NO.:	STM E2-C300
SCALE:	AS NOTED

PREPARED FOR:

LANGER GRAMOR, LLC.
19767 SW 72ND AVENUE
SUITE 100
TUALATIN, OR 97062

DATE: 6-21-12

REGISTERED PROFESSIONAL ENGINEER
56539PE
OREGON
JANUARY 13, 2012
ALEXANDER H. HURLEY

RENEWAL DATE: 6/30/15

JOB NUMBER
2929

SHEET
C200

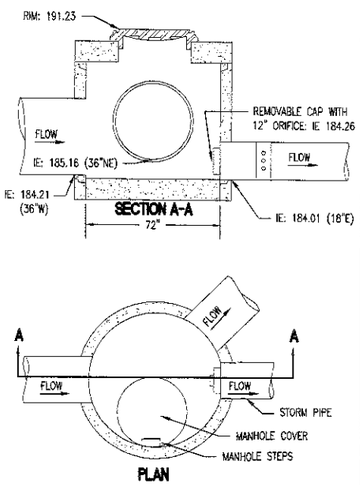

STORM MANHOLE A8 DETAIL
NTS

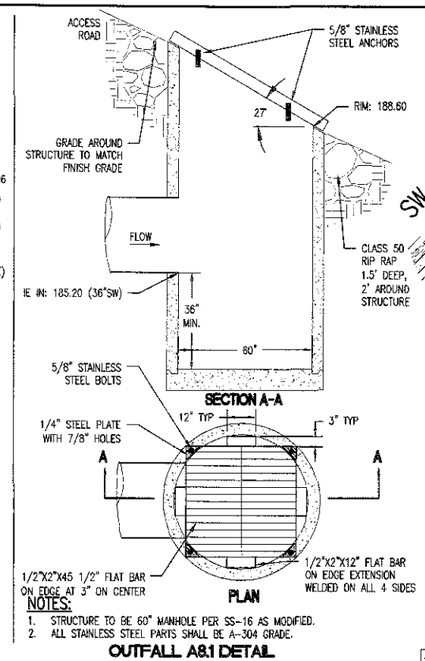

NOTES:
1. STRUCTURE TO BE 60" MANHOLE PER SS-16 AS MODIFIED.
2. ALL STAINLESS STEEL PARTS SHALL BE A-304 GRADE.

OUTFALL A8.1 DETAIL
NTS

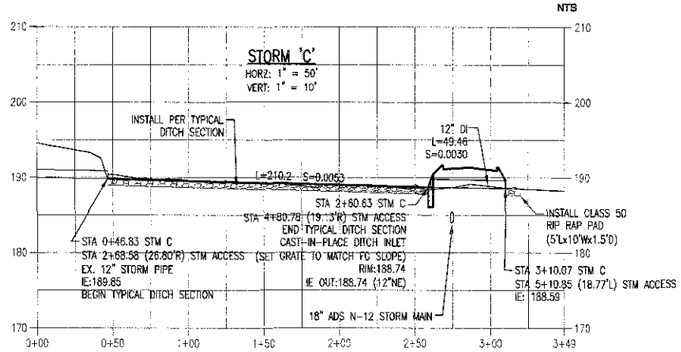

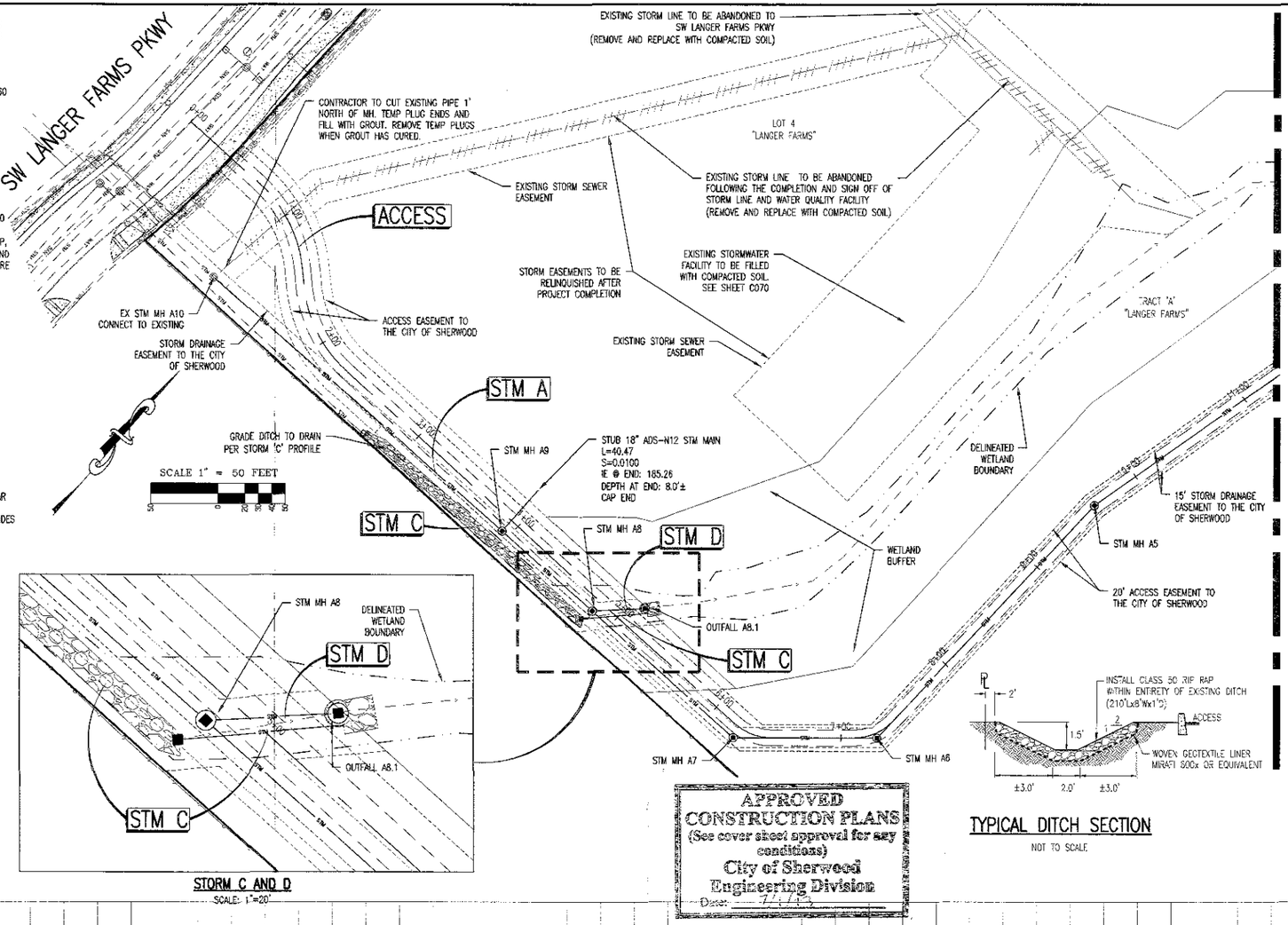

STORM C AND D
SCALE: 1"=20'

APPROVED
CONSTRUCTION PLANS
(See cover sheet approval for any conditions)
City of Sherwood
Engineering Division
Date: 7/1/13

TYPICAL DITCH SECTION
NOT TO SCALE

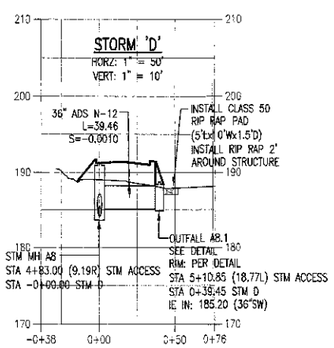

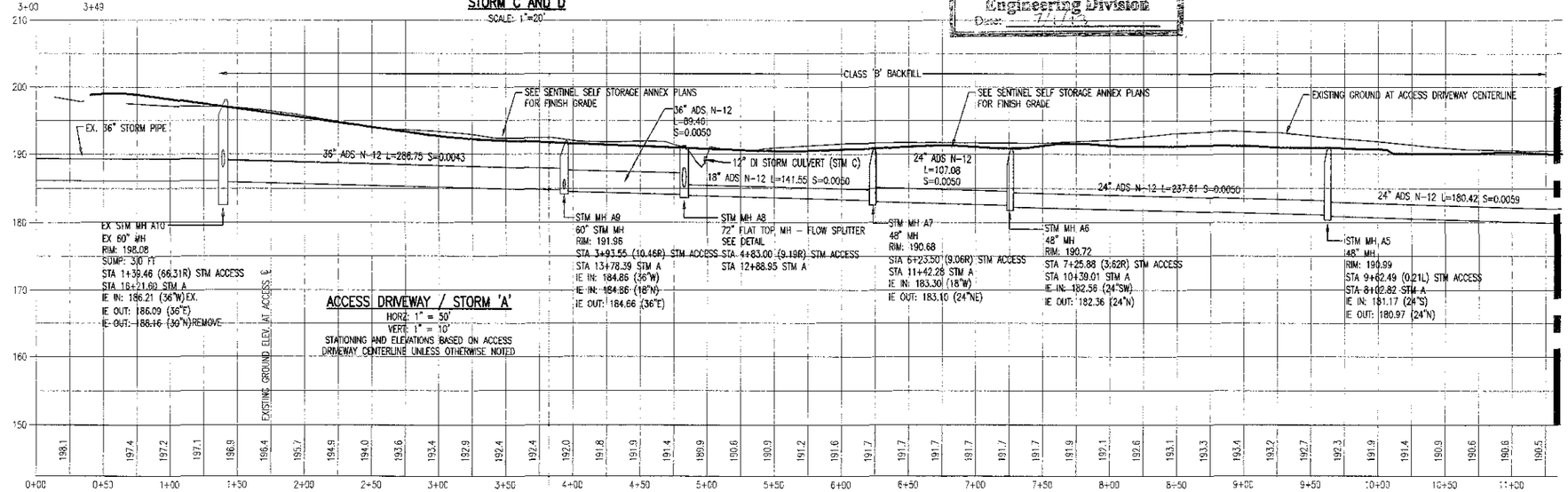

ACCESS DRIVEWAY / STORM 'A'
HORZ: 1" = 50'
VERT: 1" = 10'
STATIONING AND ELEVATIONS BASED ON ACCESS DRIVEWAY CENTERLINE UNLESS OTHERWISE NOTED

MATCHLINE - SEE SHEET C202

STORM 'A' AND ACCESS PLAN AND PROFILE WEST

PERMIT SET
LANGER FARMS REGIONAL PUBLIC STORMWATER FACILITIES
SHERWOOD OREGON
WASHINGTON COUNTY TAX MAP 2S 1 29D
TAX LOT 300

AKS ENGINEERING & FORESTRY
ENGINEERING · PLANNING
SURVEYING · FORESTRY
13910 SW GALBREATH DR., SUITE 100
SHERWOOD, OR 97140
PHONE: (503) 925-8799
FAX: (503) 925-8969

DESIGNED BY:	AHH
DRAWN BY:	RSW
CHECKED BY:	AHH
DRAWING NO.:	STM E2-C201
SCALE:	AS NOTED

PREPARED FOR:
LANGER GRAMOR, LLC.
19767 SW 72ND AVENUE
SUITE 100
TUALATIN, OR 97062

DATE: 6-21-13

REGISTERED PROFESSIONAL ENGINEER
OREGON
JANUARY 15, 2002
ALEXANDER H. HURLEY
RENEWAL DATE: 6/30/15

JOB NUMBER
2929

SHEET
C201

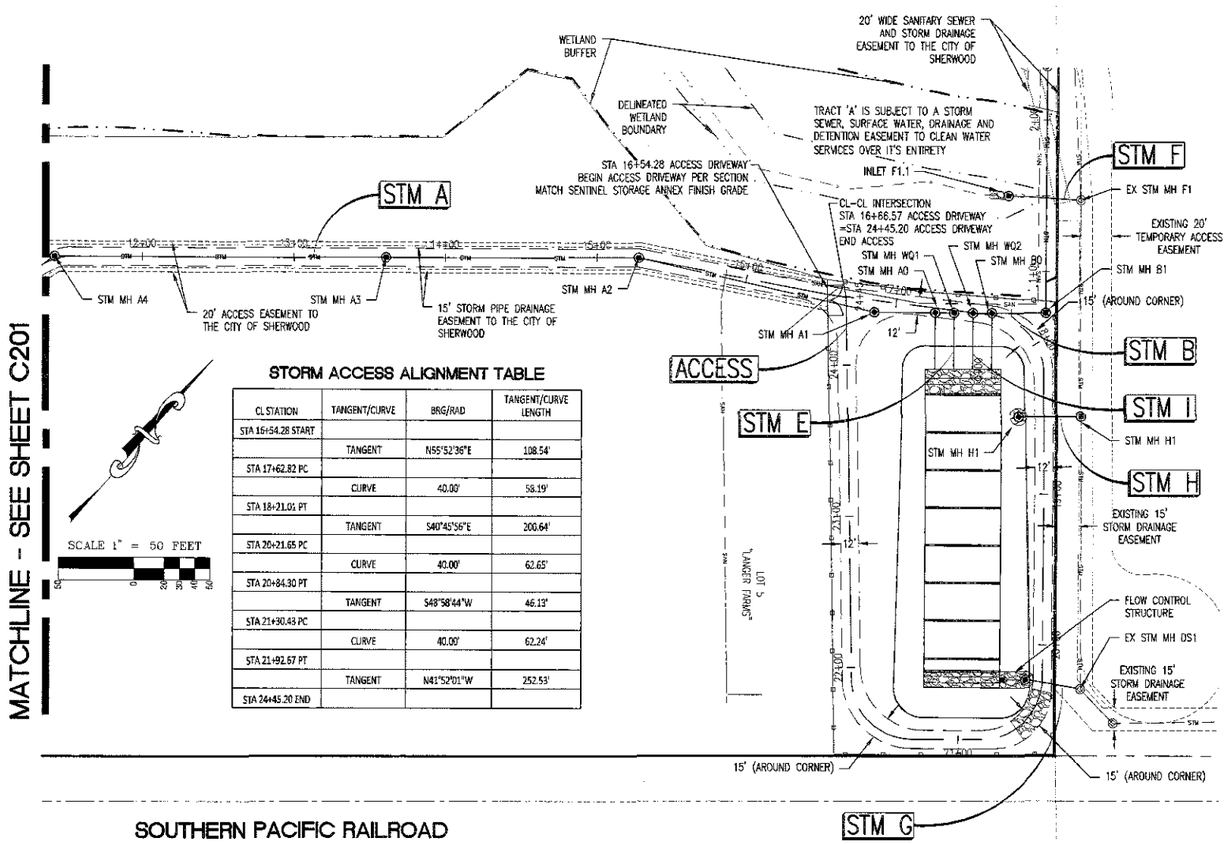

STORM ACCESS ALIGNMENT TABLE

CL STATION	TANGENT/CURVE	BRG/RAD	TANGENT/CURVE LENGTH
STA 16+54.28 START			
	TANGENT	N55°52'36"E	108.54'
STA 17+62.82 PC			
	CURVE	40.00'	58.19'
STA 18+21.01 PT			
	TANGENT	S40°45'56"E	200.64'
STA 20+21.65 PC			
	CURVE	40.00'	62.65'
STA 20+84.30 PT			
	TANGENT	S48°58'44"W	46.13'
STA 21+30.43 PC			
	CURVE	40.00'	62.24'
STA 21+92.67 PT			
	TANGENT	N41°52'01"W	252.53'
STA 24+45.20 END			

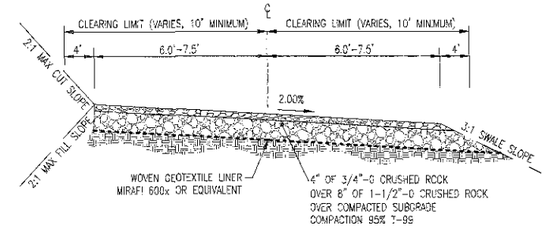

REGIONAL STORMWATER FACILITY ACCESS SECTION

NOT TO SCALE
STA 16+54.28 TO STA 24+45.20

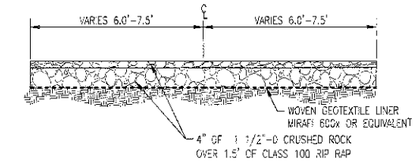

OVERFLOW ACCESS SECTION

NOT TO SCALE

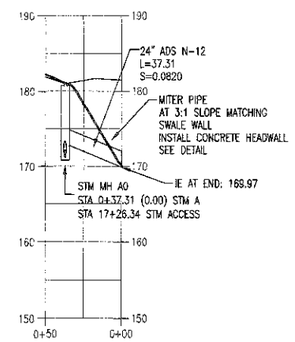

STORM 'A'

HORZ: 1" = 50'
VERT: 1" = 10'

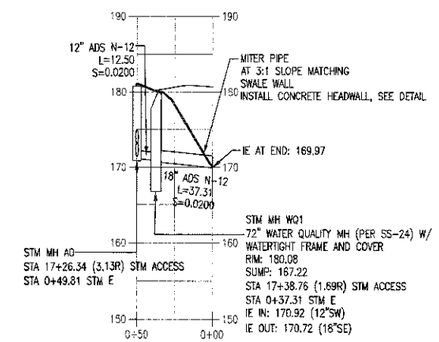

STORM 'E'

HORZ: 1" = 50'
VERT: 1" = 10'

APPROVED
CONSTRUCTION PLANS
(See cover sheet approval for any conditions)
City of Sherwood
Engineering Division
Date: 7-1-13

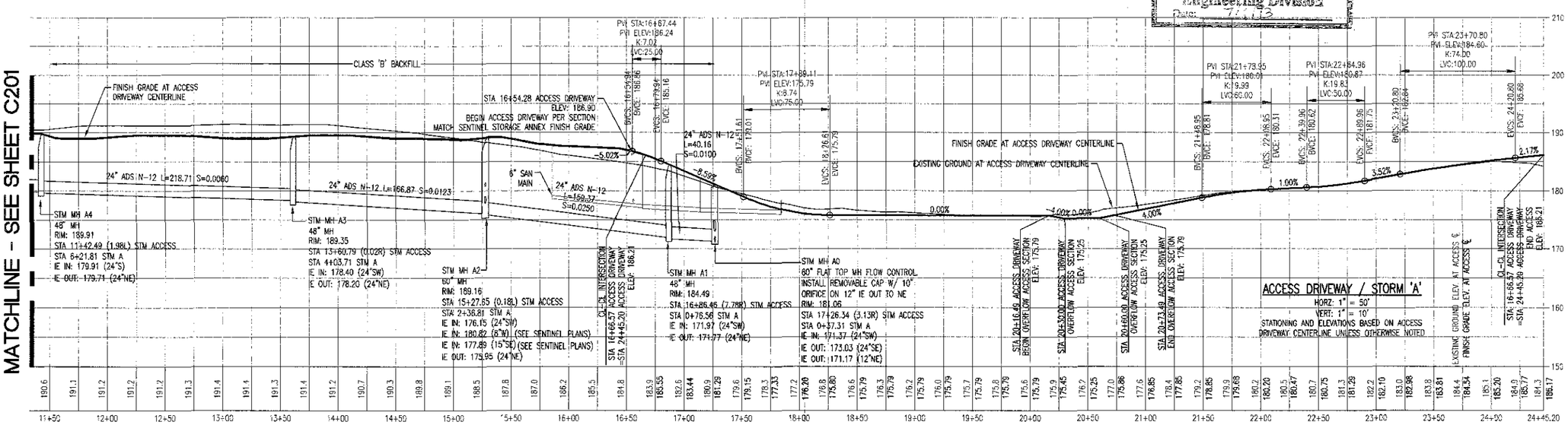

ACCESS DRIVEWAY / STORM 'A'

HORZ: 1" = 50'
VERT: 1" = 10'
STATIONING AND ELEVATIONS BASED ON ACCESS DRIVEWAY CENTERLINE UNLESS OTHERWISE NOTED

STORM 'A' AND ACCESS PLAN AND PROFILE EAST

PERMIT SET
LANGER FARMS REGIONAL PUBLIC STORMWATER FACILITIES
SHERWOOD OREGON
TAX LOT 300
WASHINGTON COUNTY TAX MAP 2S 1 29D

AKS ENGINEERING & FORESTRY
ENGINEERING · PLANNING
SURVEYING · FORESTRY
13910 SW GALBREATH DR., SUITE 100
SHERWOOD, OR 97140
PHONE: (503) 925-8799
FAX: (503) 925-8969

DESIGNED BY:	AHH
DRAWN BY:	RSW
CHECKED BY:	AHH
DRAWING NO.:	STM E2-C201
SCALE:	AS NOTED

PREPARED FOR:
LANGER CRAMOR, LLC.
19767 SW 72ND AVENUE
SUITE 100
TUALATIN, OR 97062

DATE: 6-21-13

REGISTERED PROFESSIONAL ENGINEER 56539PE OREGON JANUARY 15, 2013 ALEXANDER H. HURLEY
RENEWAL DATE: 6/30/15

JOB NUMBER
2929

SHEET
C202

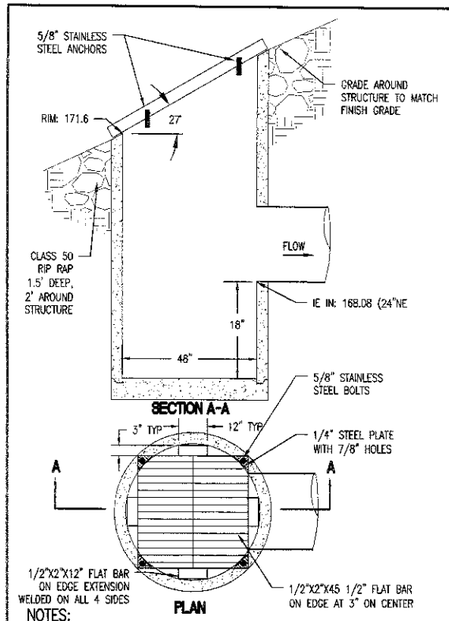

NOTES:
1. STRUCTURE TO BE 48" MANHOLE PER SS-1 AS MODIFIED.
2. ALL STAINLESS STEEL PARTS SHALL BE A-304 GRADE.

INLET F1.1 DETAIL
NTS

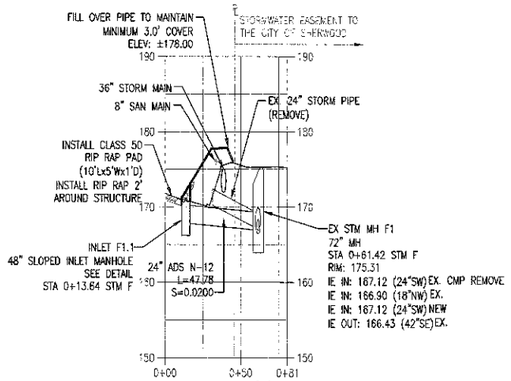

STORM "F"
HORZ: 1" = 50'
VERT: 1" = 10'

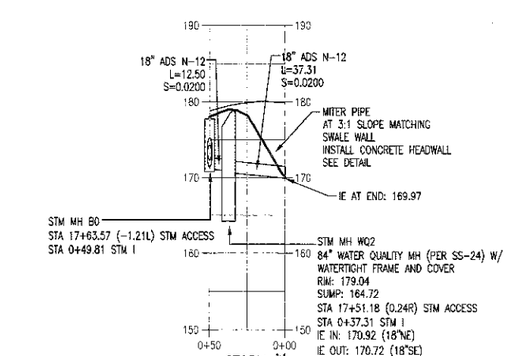

STORM "I"
HORZ: 1" = 50'
VERT: 1" = 10'

STORM MAIN TO BE STUBBED TO STORM MANHOLE B4. REMAINDER OF STORM MAIN TO THE NORTH OF SW CENTURY DRIVE AND WITHIN SW CENTURY DRIVE TO BE CONSTRUCTED WITH THE DEVELOPMENT OF LOTS 1-3 OF THE LANGER FARMS SUBDIVISION PER THE SW CENTURY DRIVE EXTENSION PLANS.

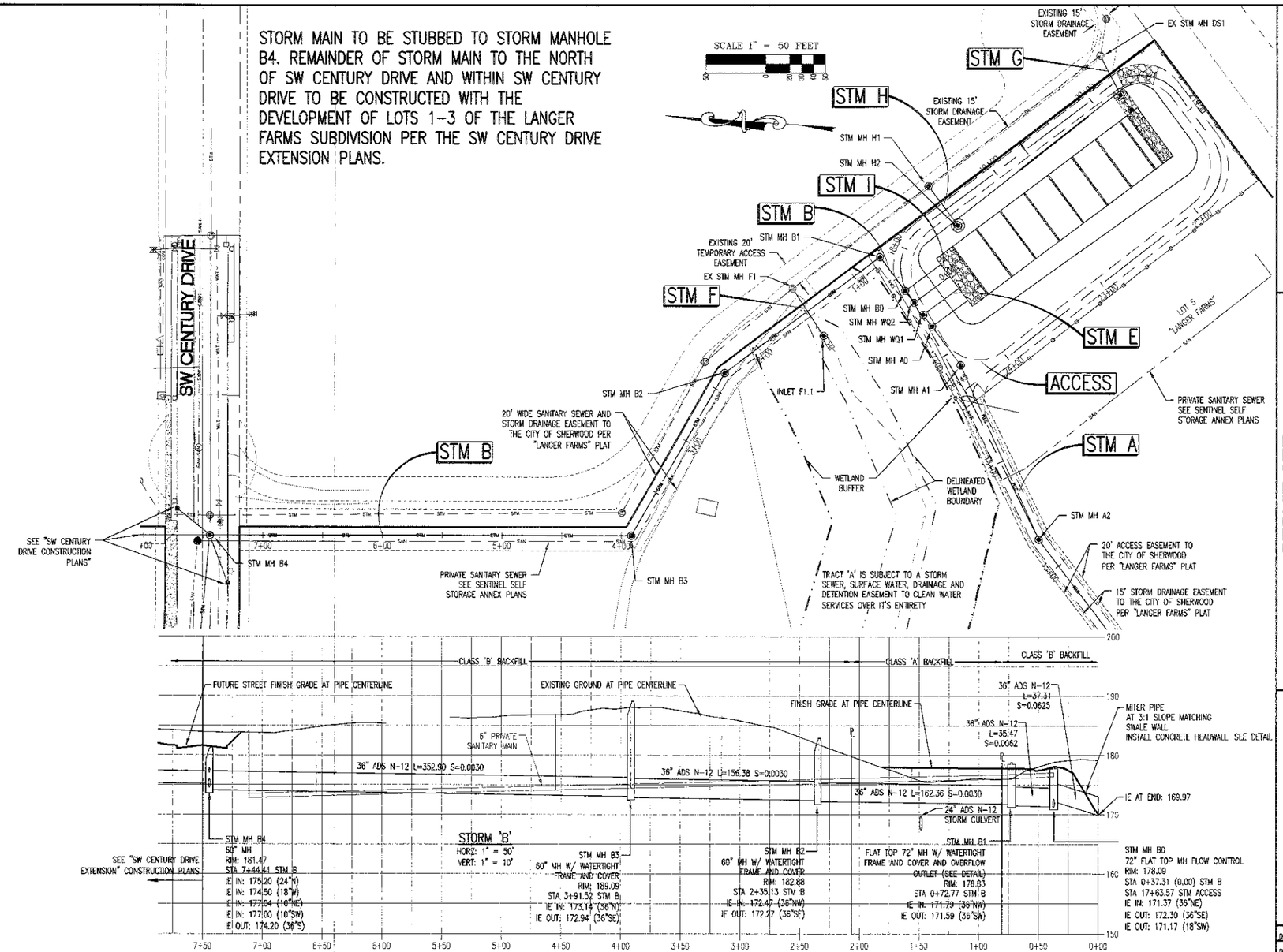

APPROVED
CONSTRUCTION PLANS
(See cover sheet approval for any conditions)
City of Sherwood
Engineering Division
Date: 7/1/13

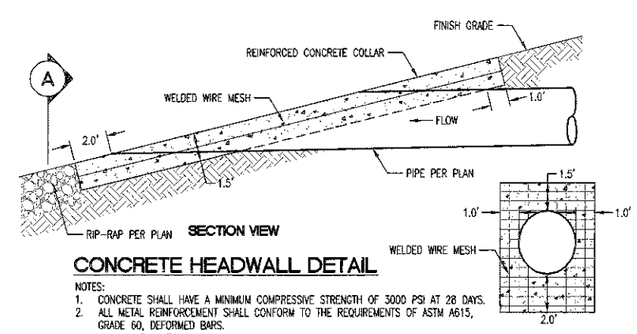

CONCRETE HEADWALL DETAIL

NOTES:
1. CONCRETE SHALL HAVE A MINIMUM COMPRESSIVE STRENGTH OF 3000 PSI AT 28 DAYS.
2. ALL METAL REINFORCEMENT SHALL CONFORM TO THE REQUIREMENTS OF ASTM A615, GRADE 60, DEFORMED BARS.
3. INSTALL 6" X 6" 10 GAUGE WELDED WIRE MESH FABRIC.

STORM 'B' PLAN AND PROFILE

PERMIT SET
LANGER FARMS REGIONAL PUBLIC STORMWATER FACILITIES
SHERWOOD OREGON
WASHINGTON COUNTY TAX MAP 2S 1 29D
TAX LOT 300

AKS ENGINEERING & FORESTRY
ENGINEERING · PLANNING
SURVEYING · FORESTRY
13910 SW GALBREATH DR., SUITE 100
SHERWOOD, OR 97140
PHONE: (503) 925-8799
FAX: (503) 925-8969

DESIGNED BY:	AHH
DRAWN BY:	RSW
CHECKED BY:	AHH
DRAWING NO.:	STM E2-C201
SCALE:	AS NOTED

PREPARED FOR:
LANGER GRAMOR, LLC.
19767 SW 72ND AVENUE
SUITE 100
TUALATIN, OR 97062

DATE: 6-21-13

REGISTERED PROFESSIONAL ENGINEER 56538PE OREGON JANUARY 15, 2013 ALEXANDER H. HURLEY
RENEWAL DATE: 6/30/15

JOB NUMBER
2929

SHEET
C203

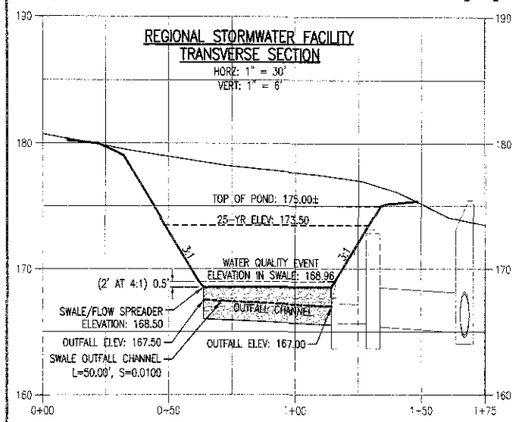

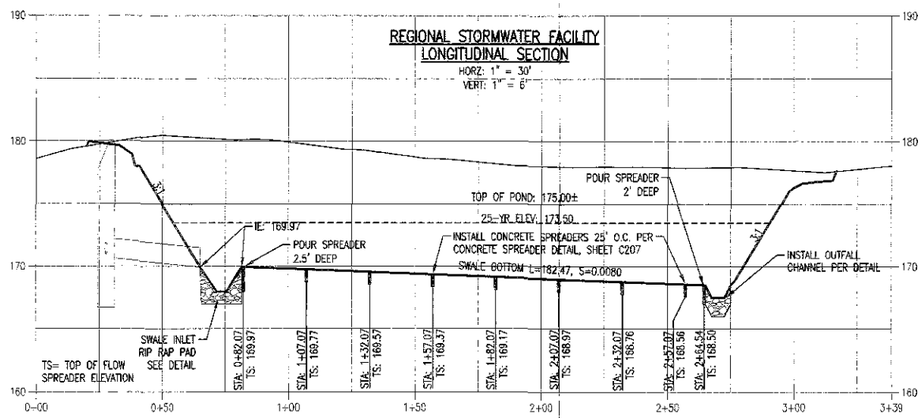

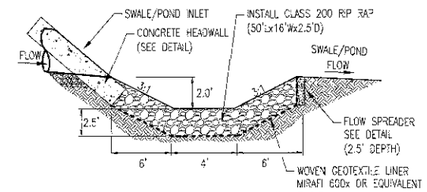

SWALE INLET RIP RAP PAD

NOT TO SCALE

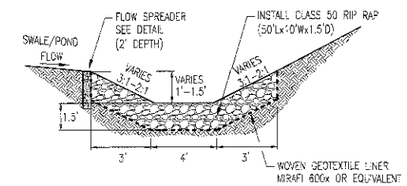

SWALE OUTFALL CHANNEL SECTION

NOT TO SCALE

APPROVED
CONSTRUCTION PLANS
(See cover sheet approval for any conditions)
City of Sherwood
Engineering Division
Date: 9/11/13

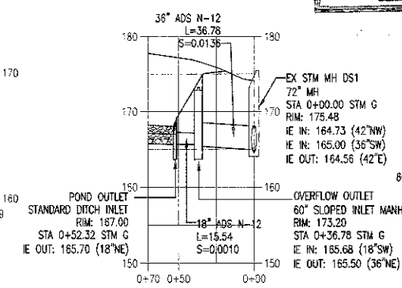

STM G

HORZ: 1" = 50'

VERT: 1" = 10'

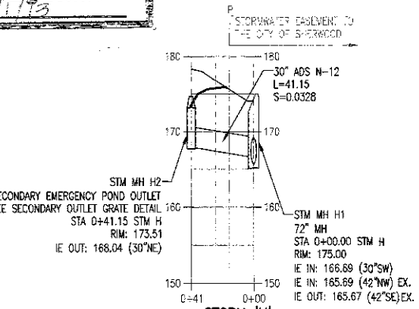

STORM 'H'

HORZ: 1" = 50'

VERT: 1" = 10'

FLOW CONTROL STRUCTURE DETAIL

NOT TO SCALE

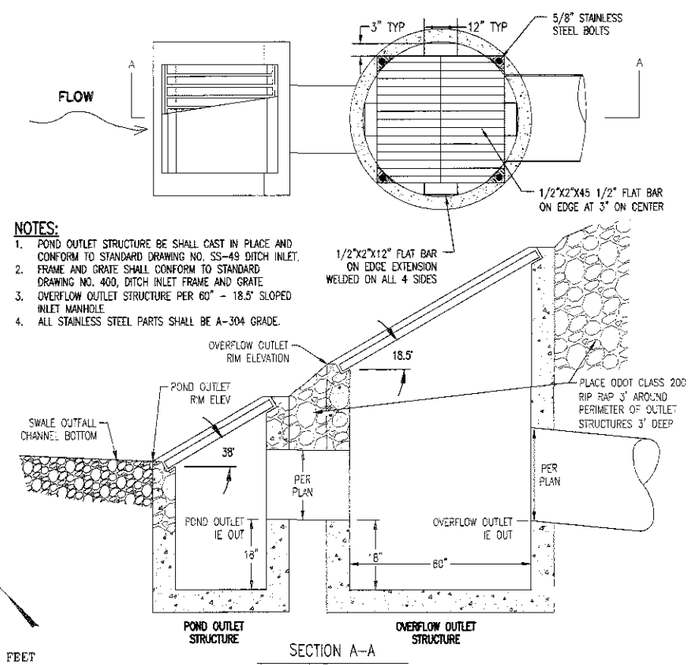

NOTES:

1. POND OUTLET STRUCTURE BE SHALL CAST IN PLACE AND CONFORM TO STANDARD DRAWING NO. SS-49 DITCH INLET.
2. FRAME AND GRATE SHALL CONFORM TO STANDARD DRAWING NO. 400, DITCH INLET FRAME AND GRATE.
3. OVERFLOW OUTLET STRUCTURE PER 60" - 18.5° SLOPED INLET MANHOLE.
4. ALL STAINLESS STEEL PARTS SHALL BE A-304 GRADE.

SECTION A-A

SEE PROFILE 'STORM G' FOR RIM, PIPE SIZE, AND IE ELEVATIONS.

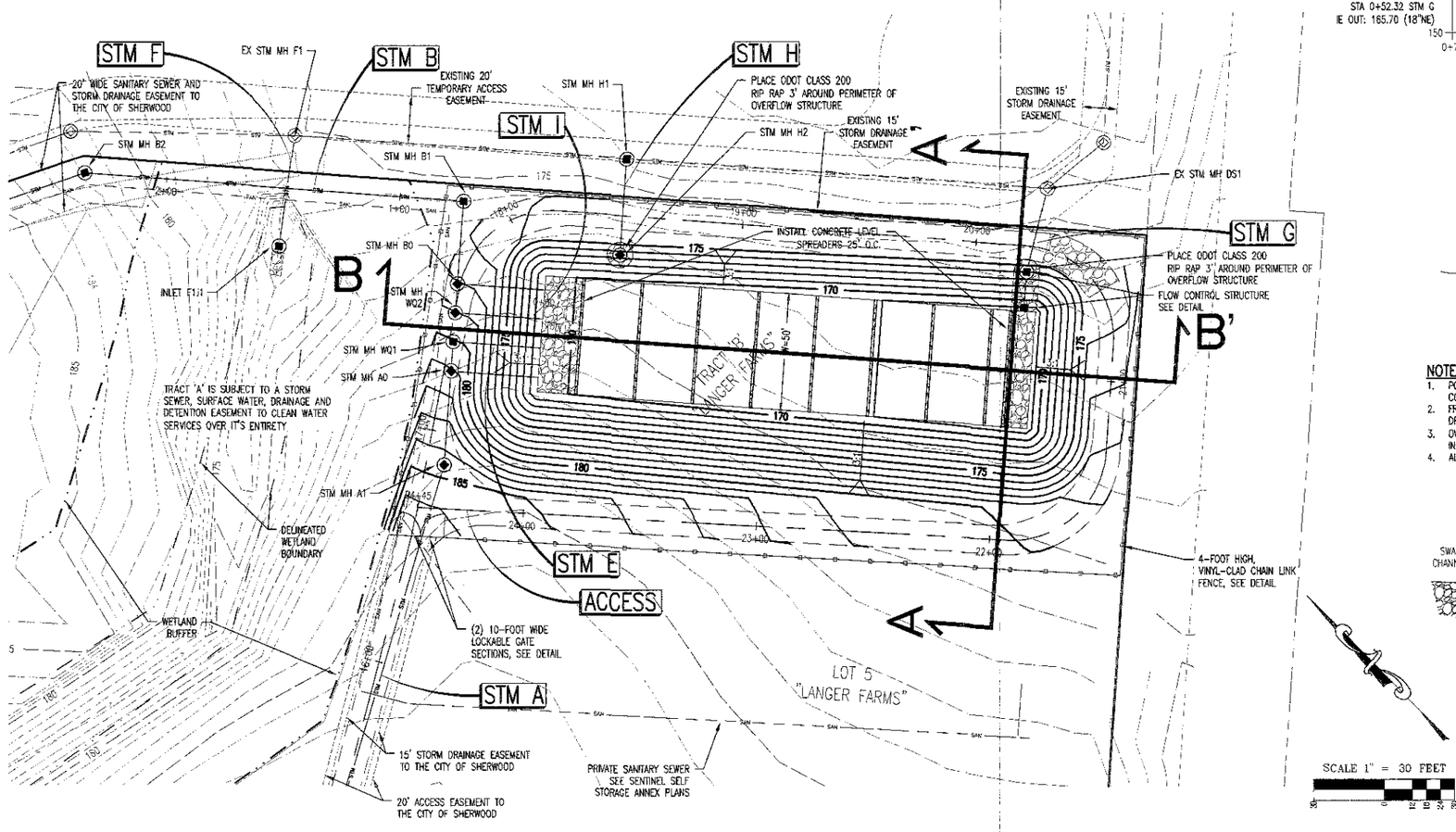

STORMWATER FACILITY
PLAN AND PROFILE

PERMIT SET
LANGER FARMS REGIONAL
PUBLIC STORMWATER FACILITIES
SHERWOOD OREGON
TAX LOT 300
WASHINGTON COUNTY TAX MAP 2S 1 29D

AKS ENGINEERING & FORESTRY
ENGINEERING · PLANNING
SURVEYING · FORESTRY
13910 SW GALBRAITH DR.,
SUITE 100
BEAVERTON, OR 97005
PHONE: (503) 563-3019
FAX: (503) 563-6848

DESIGNED BY:	AHH
DRAWN BY:	RSW
CHECKED BY:	AHH
DRAWING NO.:	STM E2-C201
SCALE:	AS NOTED

PREPARED FOR:
LANGER GRAMOR, LLC.
19767 SW 72ND AVENUE
SUITE 100
TUALATIN, OR 97062

DATE: 6-21-13

REGISTERED PROFESSIONAL ENGINEER
56539PE
OREGON
JANUARY 15, 2013
ALEXANDER H. HURLEY
RENEWAL DATE: 6/30/15

JOB NUMBER
2929

SHEET
C204

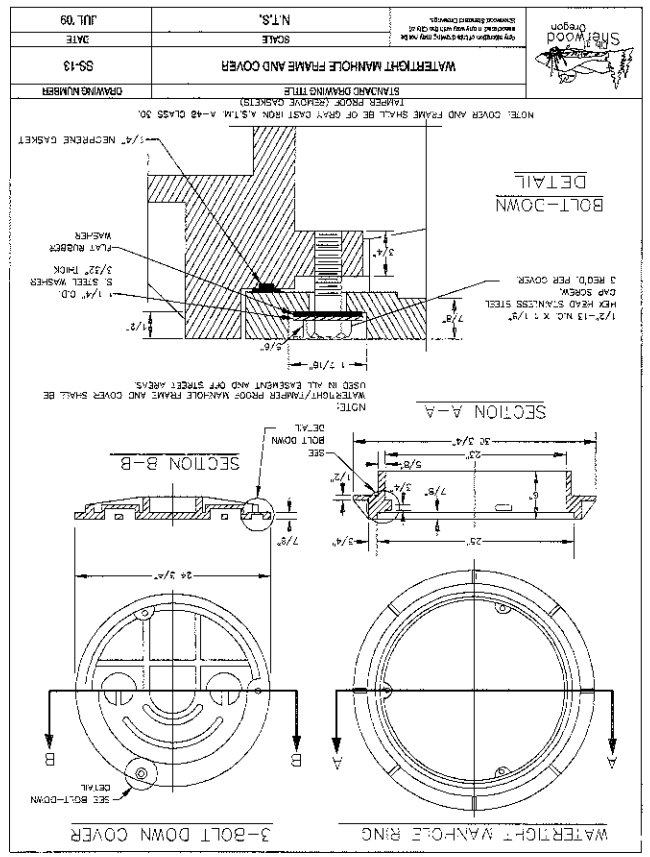

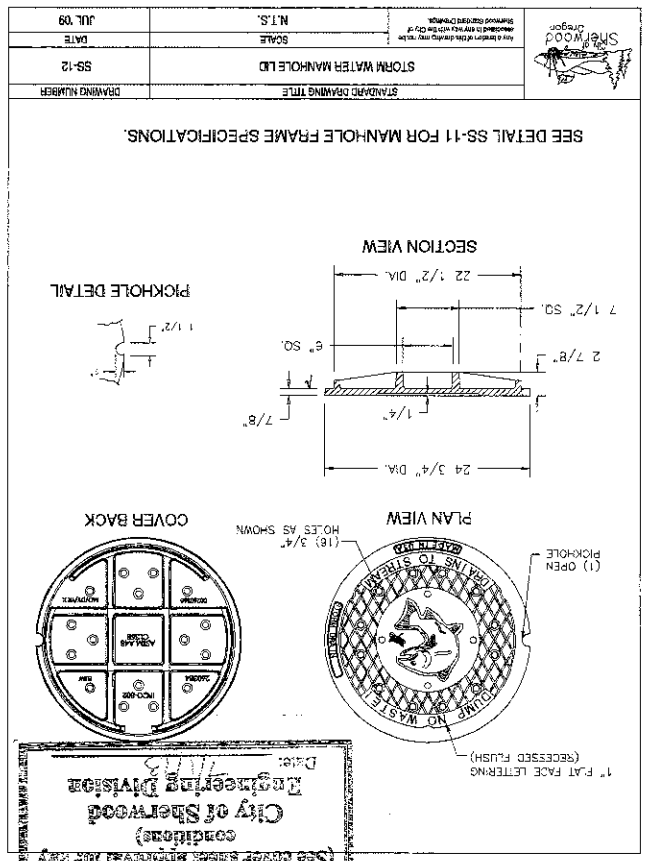

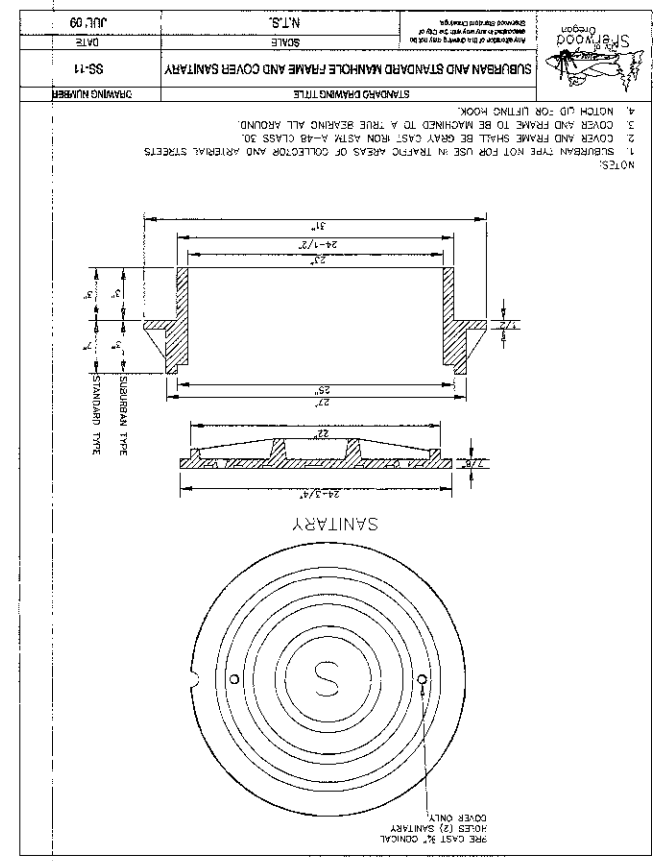

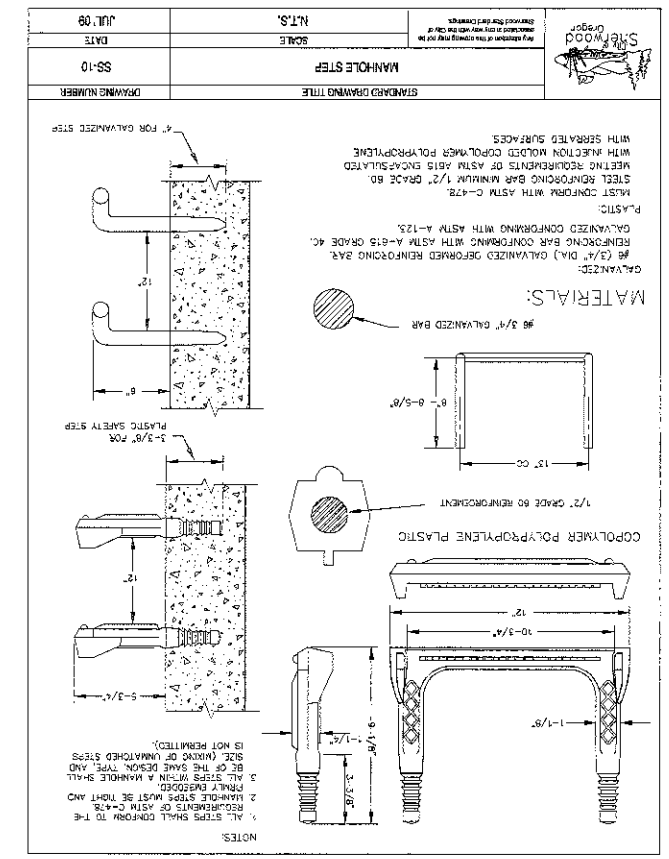

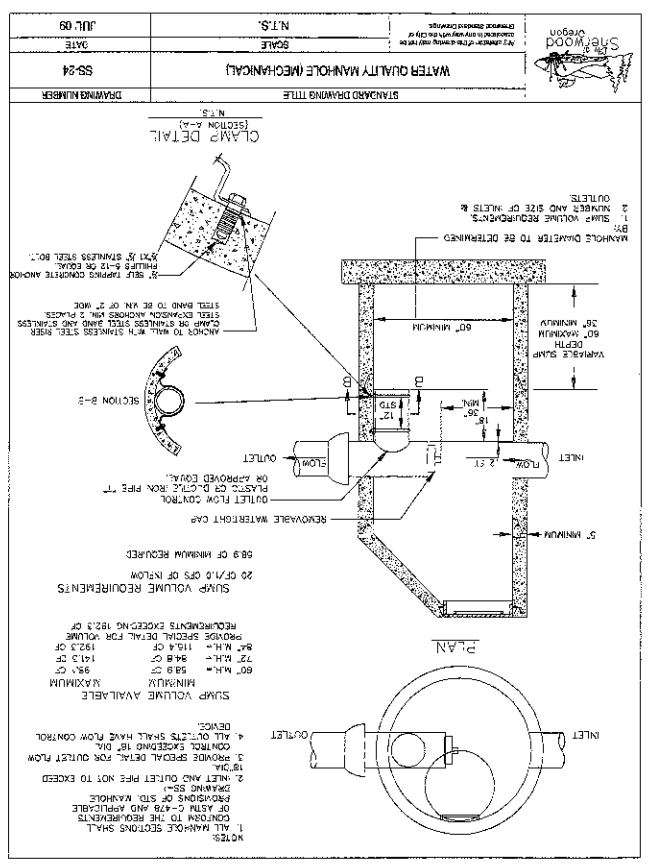

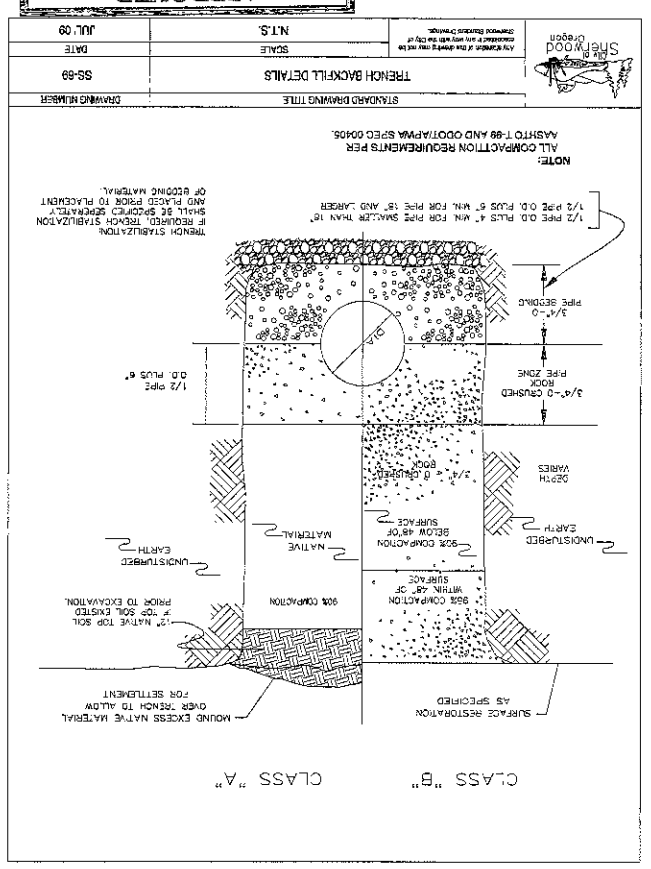

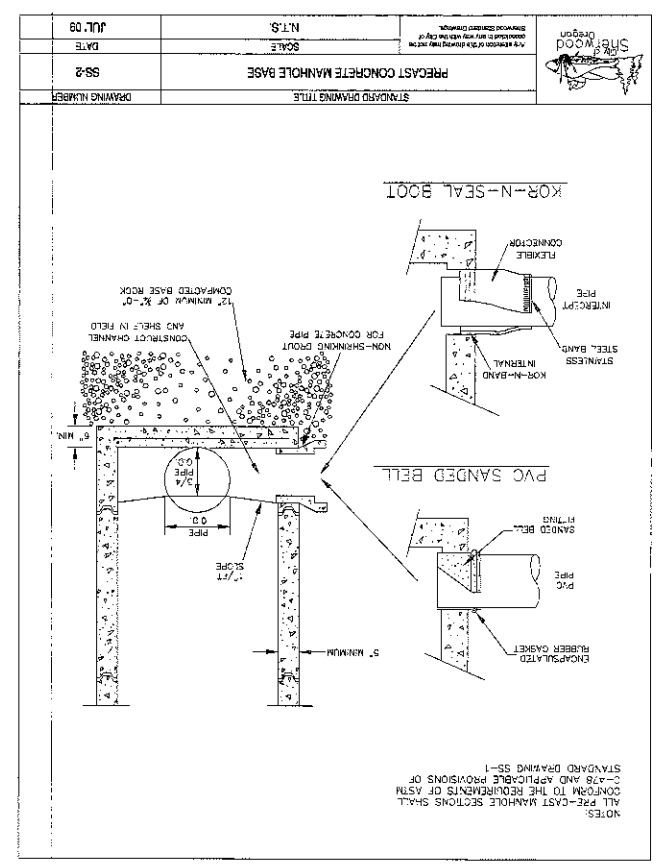

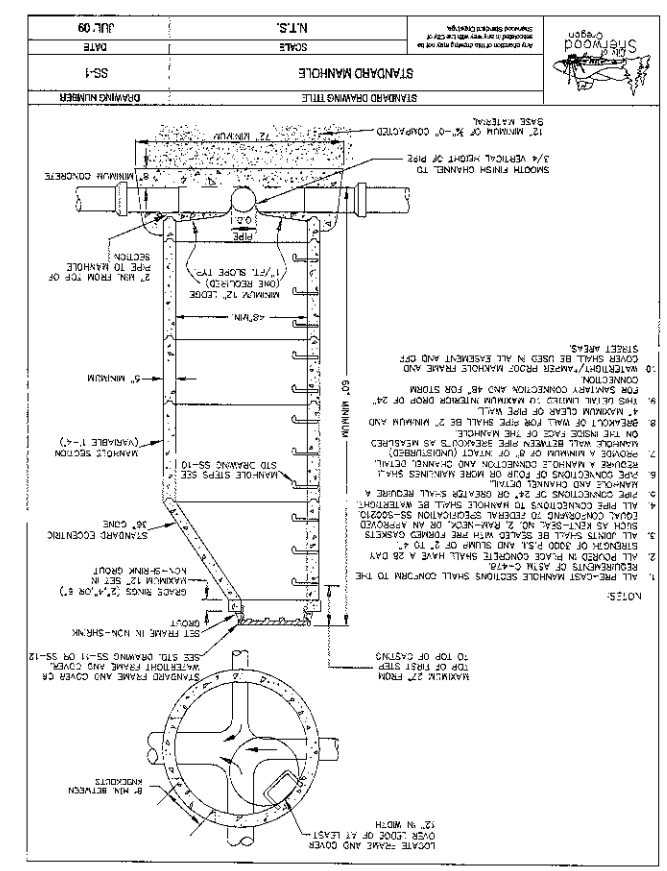

PERMIT SET
LANGER FARMS REGIONAL PUBLIC STORMWATER FACILITIES
SHERWOOD OREGON
WASHINGTON COUNTY TAX MAP 2S 1 29D
TAX LOT 300

STORMWATER CONSTRUCTION DETAILS

ENGINEERING • PLANNING
SURVEYING • FORESTRY
13910 SW GALBREATH DR., SUITE 100
SHERWOOD, OR 97140
PHONE: (503) 925-8799
FAX: (503) 925-8869
AKS ENGINEERING & FORESTRY

DESIGNED BY:	AHH
DRAWN BY:	RSW
CHECKED BY:	AHH
DRAWING NO.:	STM E2-C205
SCALE:	AS NOTED

PREPARED FOR:
LANGER GRAMOR, LLC.
19767 SW 72ND AVENUE
SUITE 100
TUALATIN, OR 97062

DATE: 8-21-13

REGISTERED PROFESSIONAL ENGINEER
ALEXANDER H. HUDLEY
OREGON
JANUARY 13, 2004
56578PE

RENEWAL DATE: 6/30/15

JOB NUMBER
2929

SHEET
C205

APPROVED
CONSTRUCTION PLANS
City of Sherwood
Engineering Division
(See cover sheet approval for any conditions)
Date: 7/17/13

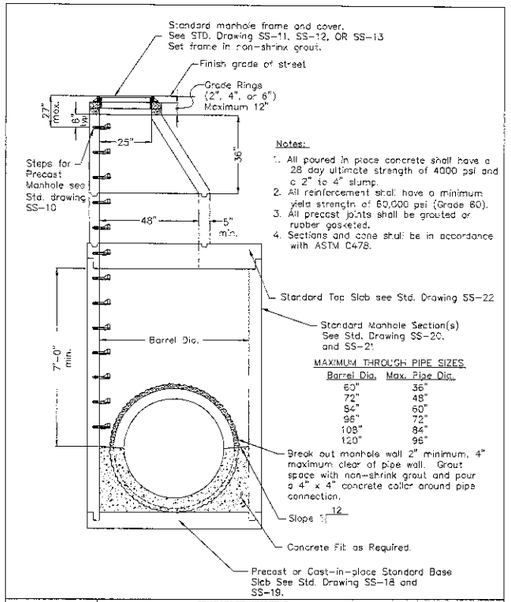

Notes:

1. All poured in place concrete shall have a 28 day ultimate strength of 4000 psi and a 2" to 4" slump.
2. All reinforcement shall have a minimum yield strength of 60,000 psi (Grade 60).
3. All precast joints shall be grouted or rubber gasketed.
4. Sections and cone shall be in accordance with ASTM C478.

MAXIMUM THROUGH PIPE SIZES

Barrel Dia.	Max. Pipe Dia.
60"	36"
72"	48"
84"	60"
96"	72"
108"	84"
120"	96"

STANDARD DRAWING TITLE	DRAWING NUMBER
LARGE PRECAST CONCRETE MANHOLE	SS-16
SCALE: N.T.S.	DATE: JUL '09

Sherwood Oregon — Any alteration of this drawing may not be associated in any way with the City of Sherwood Standard Drawings.

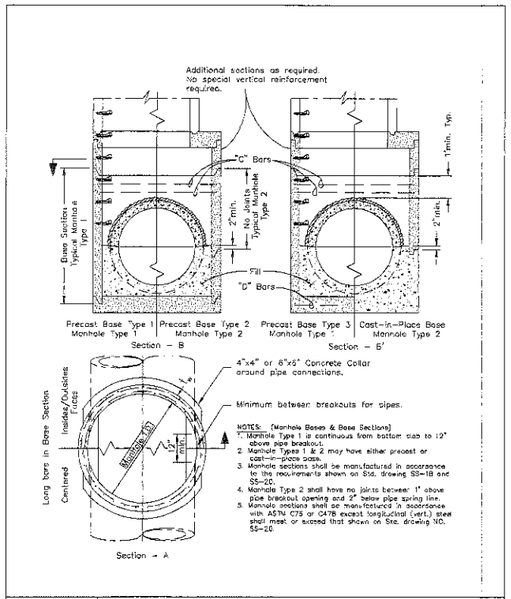

NOTES: (Manhole Bases & Base Sections)

1. Manhole Type 1 is continuous from bottom slab to 12" above pipe breakout.
2. Manhole Types 1 & 2 may have either precast or cast-in-place base.
3. Manhole sections shall be manufactured in accordance to the requirements shown on Std. Drawing SS-18 and SS-20.
4. Manhole Type 2 shall have no joints between 1' above pipe breakout opening and 2' below pipe spring line.
5. Manhole sections shall be manufactured in accordance with ASTM C75 or C478 except longitudinal (vert.) steel shall meet or exceed that shown on Std. drawing NO. SS-20.

STANDARD DRAWING TITLE	DRAWING NUMBER
LARGE PRECAST CONCRETE MANHOLE - BASES	SS-17
SCALE: N.T.S.	DATE: JUL '09

Sherwood Oregon — Any alteration of this drawing may not be associated in any way with the City of Sherwood Standard Drawings.

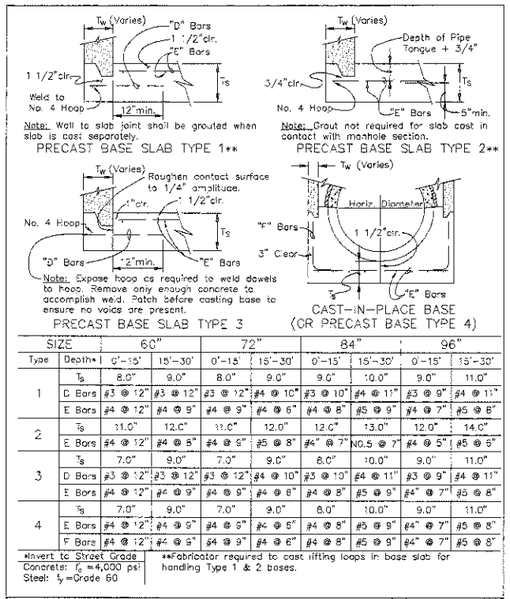

SIZE		60"		72"		84"		96"	
Type	Depth*	0'-15'	15'-30'	0'-15'	15'-30'	0'-15'	15'-30'	0'-15'	15'-30'
1	T_s	8.0"	9.0"	8.0"	9.0"	9.0"	10.0"	9.0"	11.0"
	D Bars	#3 @ 12"	#3 @ 12"	#3 @ 12"	#4 @ 10"	#3 @ 10"	#4 @ 11"	#3 @ 9"	#4 @ 11"
	E Bars	#4 @ 12"	#4 @ 9"	#4 @ 9"	#4 @ 6"	#4 @ 8"	#5 @ 9"	#4 @ 7"	#5 @ 8"
2	T_s	11.0"	12.0"	11.0"	12.0"	12.0"	13.0"	12.0"	14.0"
	E Bars	#4 @ 12"	#4 @ 8"	#4 @ 9"	#5 @ 8"	#4" @ 7"	NO.5 @ 7"	#4 @ 5"	#5 @ 5"
3	T_s	7.0"	9.0"	7.0"	9.0"	8.0"	10.0"	9.0"	11.0"
	D Bars	#3 @ 12"	#3 @ 12"	#3 @ 12"	#4 @ 10"	#3 @ 10"	#4 @ 11"	#3 @ 9"	#4 @ 11"
	E Bars	#4 @ 12"	#4 @ 9"	#4 @ 9"	#4 @ 6"	#4 @ 8"	#5 @ 9"	#4" @ 7"	#5 @ 8"
4	T_s	7.0"	9.0"	7.0"	9.0"	8.0"	10.0"	9.0"	11.0"
	E Bars	#4 @ 12"	#4 @ 9"	#4 @ 9"	#4 @ 6"	#4 @ 8"	#5 @ 9"	#4" @ 7"	#5 @ 8"
	F Bars	#4 @ 12"	#4 @ 9"	#4 @ 9"	#4 @ 6"	#4 @ 8"	#5 @ 9"	#4" @ 7"	#5 @ 8"

*Invert to Street Grade
Concrete: f'_c = 4,000 psi
Steel: f_y = Grade 60

**Fabricator required to cast lifting loops in base slab for handling Type 1 & 2 bases.

STANDARD DRAWING TITLE	DRAWING NUMBER
LARGE PRECAST CONCRETE MANHOLE - TYPES	SS-18
SCALE: N.T.S.	DATE: JUL '09

Sherwood Oregon — Any alteration of this drawing may not be associated in any way with the City of Sherwood Standard Drawings.

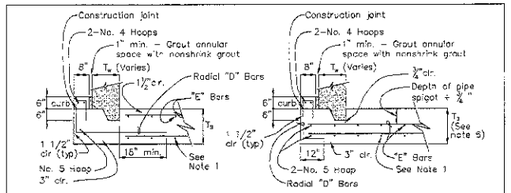

PRECAST BASE SLAB TYPE 5

1. Add bottom mat of No. 3 bars each way at same spacing as top mat.
2. Wall to slab joint shall be field grouted.
3. Curb is continuous all around base slab.
4. If curb is not cast monolithic with base slab, provide construction joint as shown.

PRECAST OR CAST-IN-PLACE BASE SLAB TYPE 6

1. Add bottom mat of No. 3 bars each way at same spacing as top mat.
2. Wall to slab joint shall be field grouted. Grout is not required for slab cast in contact with manhole section.
3. Curb is continuous all around base slab.
4. If curb is not cast monolithic with base slab, provide construction joint as shown.
5. Base slab Type 6 may be precast or cast-in-place concrete.
6. Ts for base slab Type 6 assumes a 6 1/4" spigot depth. Adjust Ts for actual spigot depth.
7. Curb may be cast in place against riser pipe without grouting.

SIZE		108"		120"	
Type	Depth*	0'-15'	15'-30'	0'-15'	15'-30'
5	T_s	10"	12"	10"	12"
	"D" Bars	No.4 @ 12"	No.5 @ 12"	No.4 @ 12"	No.5 @ 12"
	"E" Bars	No.5 @ 12"	No.5 @ 12"	No.5 @ 12"	No.6 @ 12"
6	T_s	15.5"	17.5"	15.5"	17.5"
	"D" Bars	No.4 @ 12"	No.5 @ 12"	No.4 @ 12"	No.5 @ 12"
	"E" Bars	No.5 @ 12"	No.5 @ 12"	No.5 @ 12"	No.6 @ 12"

*Invert to Street Grade
Concrete: f'_c = 4,000 psi
Steel: Grade 60

STANDARD DRAWING TITLE	DRAWING NUMBER
LARGE PRECAST CONCRETE MANHOLE BASE SLABS	SS-19
SCALE: N.T.S.	DATE: JUL '09

Sherwood Oregon — Any alteration of this drawing may not be associated in any way with the City of Sherwood Standard Drawings.

60"ø Manhole Section	NOTE: MAX. LONG. BAR SPACING IS 12" C.-C.								
	INVERT TO STREET GRADE	T_w = 5.0"			T_w = 6.0"			T_w = 6.75"		
		OUTSIDE	INSIDE	ON CTR.	OUTSIDE	INSIDE	ON CTR.	OUTSIDE	INSIDE	ON CTR.
TYPE 1	0 Ft to 15 Ft	0.16	0.15	0.24	0.16	0.09	0.20	0.13	0.08	0.17
	15 Ft to 30 Ft	0.32	0.18	0.53	0.25	0.19	0.42	0.22	0.16	0.36
TYPE 2	0 Ft to 15 Ft	0.17	0.15	0.28	0.19	0.09	0.22	0.16	0.08	0.20
	15 Ft to 30 Ft	0.37	0.18	0.63	0.28	0.19	0.48	0.24	0.16	0.42

"C" Bars–1 No. 4 hoop req'd. for less than 2'-0" clr. between backout and top of section.

72"ø Manhole Section	NOTE: MAX. LONG. BAR SPACING IS 12" C.-C.								
	INVERT TO STREET GRADE	T_w = 5.0"			T_w = 7.0"			T_w = 7.75"		
		OUTSIDE	INSIDE	ON CTR.	OUTSIDE	INSIDE	ON CTR.	OUTSIDE	INSIDE	ON CTR.
TYPE 1	0 Ft to 15 Ft	0.19	0.19	0.26	0.17	0.15	0.22	0.16	0.14	0.20
	15 Ft to 30 Ft	0.33	0.28	0.58	0.27	0.23	0.48	0.26	0.26	0.42
TYPE 2	0 Ft to 15 Ft	0.19	0.13	0.28	0.15	0.15	0.23	0.16	0.17	0.28
	15 Ft to 30 Ft	0.36	0.13	0.65	0.29	0.15	0.52	0.26	0.17	0.46

"C" Bars– 2 NO. 5 HOOPS 2" CLR. OF TOP OF MH BARREL; 2 NO. 3 HOOPS 2" CLR. OVER PIPE BLOCKOUTS — REQ'D. FOR LESS THAN 2'-0" CLR. BETWEEN BLOCKOUT AND TOP OF SECTION.

84"ø Manhole Section	NOTE: MAX. LONG. BAR SPACING IS 12" C.-C.								
	INVERT TO STREET GRADE	T_w = 7.0"			T_w = 8.0"			T_w = 8.75"		
		OUTSIDE	INSIDE	ON CTR.	OUTSIDE	INSIDE	ON CTR.	OUTSIDE	INSIDE	ON CTR.
TYPE 1	0 Ft to 15 Ft	0.20	0.13	0.26	0.17	0.12	0.22	0.15	0.10	0.20
	15 Ft to 30 Ft	0.33	0.23	0.59	0.28	0.26	0.50	0.30	0.23	0.45
TYPE 2	0 Ft to 15 Ft	0.23	0.15	0.33	0.21	0.17	0.28	0.19	0.19	0.25
	15 Ft to 30 Ft	0.36	0.15	0.65	0.30	0.17	0.55	0.30	0.19	0.49

"C" Bars– 2 NO. 5 HOOPS 2" CLR. OF TOP OF MH BARREL; 2 NO. 3 HOOPS 2" CLR. OVER PIPE BLOCKOUTS — REQ'D. FOR LESS THAN 2'-0" CLR. BETWEEN BLOCKOUT AND TOP OF SECTION.

96"ø Manhole Section	NOTE: MAX. LONG. BAR SPACING IS 12" C.-C.								
	INVERT TO STREET GRADE	T_w = 8.0"			T_w = 9.0"			T_w = 9.75"		
		OUTSIDE	INSIDE	ON CTR.	OUTSIDE	INSIDE	ON CTR.	OUTSIDE	INSIDE	ON CTR.
TYPE 1	0 Ft to 15 Ft	0.25	0.18	0.33	0.21	0.16	0.29	0.21	0.14	0.27
	15 Ft to 30 Ft	0.41	0.26	0.77	0.35	0.30	0.66	0.37	0.27	0.59
TYPE 2	0 Ft to 15 Ft	0.26	0.17	0.34	0.22	0.19	0.30	0.20	0.21	0.28
	15 Ft to 30 Ft	0.43	0.17	0.82	0.37	0.19	0.70	0.34	0.21	0.63

"C" Bars– 2 NO. 5 HOOPS 2" CLR. OF TOP OF MH BARREL; 2 NO. 3 HOOPS 2" CLR. OVER PIPE BLOCKOUTS — REQ'D. FOR LESS THAN 2'-0" CLR. BETWEEN BLOCKOUT AND TOP OF SECTION.

PROVIDE MIN. LONGITUD. REINF. AS SHOWN, "L" CLR. OF INSIDE AND OUTSIDE FACES, OR AT CENTER OF WALL. AREAS ARE IN^2/FT OF CIRCUMFERENCE, AND MAY BE WELDED WIRE FABRIC, BARS OR A COMBINATION OF BOTH.

STANDARD DRAWING TITLE	DRAWING NUMBER
LARGE PRECAST CONCRETE MANHOLE - LONG BASE SECTION REINF.	SS-20
SCALE: N.T.S.	DATE: JUL '09

Sherwood Oregon — Any alteration of this drawing may not be associated in any way with the City of Sherwood Standard Drawings.

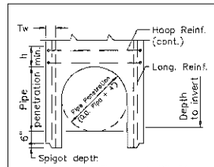

For Base Slab see 4-08-3A

MANHOLE BASE SECTION ELEVATION

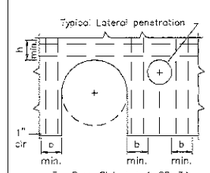

For Base Slab see 4-08-3A

PARTIAL MANHOLE BASE SECTION ROLLOUT

Notes:

1. Manufacture manhole base section and risers above in conformance with ASTM C478 except as noted in specifications and herein. Lap length for hoop reinforcement in band "h" shall be 30 bar diameters and laps shall be staggered.
2. Steel reinforcement in bands "h" and "b" is in addition to that required by ASTM C478 and is shown in square inches per foot of band width. Bar spacing shall not exceed 6".
3. Manhole base sections shall have no joints below top of band "h".
4. Concrete: $f'c$ = 4,000 psi
   Reinforcement steel: Grade 60
5. There shall be no penetrations in hoop band "h" above main line pipe penetrations or in longitudinal bands "b" next to both sides of all openings.
6. Additional longitudinal reinforcement area can be reduced 50% outside of "b" bands.
7. Thickness "w" is minimum manhole base section wall thickness for a given pipe diameter.
8. Do not backfill until concrete fill over the manhole base has achieved 50% of its compressive strength (4,000 psi). For shape of concrete fill see Std. Drawing NO. 650.
9. Provide 6"x6" concrete collar around pipe penetrations per Std. Drawing SS-17.

MH Dia. (in)	Thickness Tw min. (in)	Band Width h=b min. (ft)	Depth to invert max. (ft)	Inside Pipe Dia. (in)	Additional Reinforcement Recuired: Hoop Reinf. (h) Outside Face (in^2/ft)	Hoop Reinf. (h) Inside Face (in^2/ft)	Long. Reinf. (b) Outside Face (in^2/ft)	Long. Reinf. (b) Inside Face (in^2/ft)
108	9	1.00	15	48 or less	.381	.381	.260	.260
108	9	1.25	15	54-60	.381	.381	.394	.394
108	10	1.75	15	66-84	.381	.381	.643	.643
108	11	1.00	30	48 or less	.790	.790	.432	.432
108	12	1.25	30	54-60	.790	.790	.576	.576
108	16	1.75	30	66-84	.790	.790	.773	.773
120	10	1.00	15	48 or less	.423	.423	.260	.260
120	10	1.50	15	54-72	.423	.423	.480	.480
120	11	2.00	15	78-96	.423	.423	.715	.715
120	11	1.00	30	48 or less	.880	.880	.432	.432
120	14	1.50	30	54-72	.880	.880	.677	.677
120	17	2.00	30	78-96	.880	.880	.991	.991

STANDARD DRAWING TITLE	DRAWING NUMBER
LARGE PRECAST CONCRETE MANHOLE Base Section Reinforcement 108" & 120"	SS-21
SCALE: N.T.S.	DATE: JUL '09

Sherwood Oregon — Any alteration of this drawing may not be associated in any way with the City of Sherwood Standard Drawings.

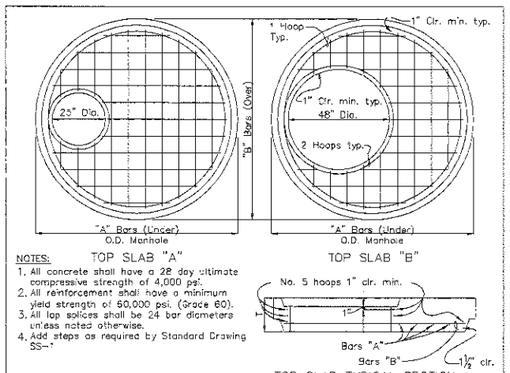

TOP SLAB "A"

TOP SLAB "B"

NOTES:

1. All concrete shall have a 28 day ultimate compressive strength of 4,000 psi.
2. All reinforcement shall have a minimum yield strength of 60,000 psi. (Grade 60).
3. All lap splices shall be 24 bar diameters unless noted otherwise.
4. Add steps as required by Standard Drawing SS-1

TOP SLAB TYPICAL SECTION

	TOP SLAB "A"			TOP SLAB "B"			TOP SLAB "B"		
	COVER DEPTH								
	6" to 12"			4'-0" to 7'-0"			7'-1" to 22'-0"		
Size	T	"A" Bars	"B" Bars	T	"A" Bars	"B" Bars	T	"A" Bars	"B" Bars
60"	8"	No.5 @ 7½"	No.5 @ 7½"	12"	No.5 @ 9"	No.5 @ 9"	12"	No.5 @ 9"	No.5 @ 9"
72"	10"	No.5 @ 7"	No.5 @ 7"	12"	No.5 @ 9"	No.5 @ 9"	12"	No.5 @ 7"	No.5 @ 7"
84"	11"	No.5 @ 7"	No.5 @ 7"	12"	No.5 @ 6"	No.5 @ 6"	12"	No.6 @ 6"	No.5 @ 7"
96"	12"	No.5 @ 6"	No.5 @ 6"	12"	No.5 @ 6"	No.5 @ 6"	14"	No.6 @ 6"	No.5 @ 6"
108"	N/A	N/A	N/A	12"	No.6 @ 8"	No.6 @ 8"	16"	No.7 @ 9"	No.7 @ 9"
120"	N/A	N/A	N/A	12"	No.6 @ 7"	No.6 @ 7"	16"	No.7 @ 8"	No.7 @ 8"

STANDARD DRAWING TITLE	DRAWING NUMBER
LARGE PRECAST CONCRETE MANHOLE TOP SLABS	SS-22
SCALE: N.T.S.	DATE: JUL '09

Sherwood Oregon — Any alteration of this drawing may not be associated in any way with the City of Sherwood Standard Drawings.

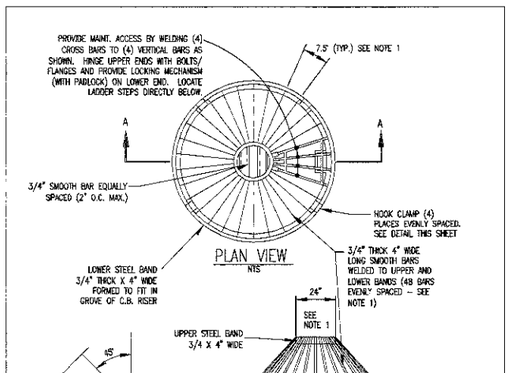

NOTES:

1. DIMENSIONS TO MAINTAIN 22.5° ANGLE ON "VERTICAL" BARS AND 3.5" O.C. MAX. SPACING OF BARS AROUND LOWER STEEL BAND.
2. METAL PARTS: CORROSION RESISTANT.

APPROVED SECONDARY OUTLET GRATE DETAIL

NTS

APPROVED CONSTRUCTION PLANS
(See cover sheet approval for any conditions)
City of Sherwood
Engineering Division
Date: 7/1/13

STORMWATER CONSTRUCTION DETAILS

PERMIT SET
LANGER FARMS REGIONAL PUBLIC STORMWATER FACILITIES
SHERWOOD OREGON

TAX LOT 300 — WASHINGTON COUNTY TAX MAP 2S 1 29D

AKS ENGINEERING & FORESTRY
ENGINEERING • PLANNING
SURVEYING • FORESTRY
13910 SW GALBREATH DR., SUITE 100
SHERWOOD, OR 97140
PHONE: (503) 925-8799
FAX: (503) 925-8889

DESIGNED BY:	AHH
DRAWN BY:	RSW
CHECKED BY:	AHH
DRAWING NO.:	STM E2-C205
SCALE:	AS NOTED

PREPARED FOR:
LANGER GRAMOR, LLC.
19767 SW 72ND AVENUE
SUITE 100
TUALATIN, OR 97062

DATE: 6-21-13

REGISTERED PROFESSIONAL ENGINEER 56939PE OREGON JANUARY 15, 2002 ALEXANDER H. HURLEY
RENEWAL DATE: 6/30/15

JOB NUMBER 2929

SHEET C206

CONSTRUCTION

1. Water Quality Swale shall be over-excavated and filled to final grade with 12-inch amended topsoil. Topsoil amendments shall be garden compost, not conventional fertilizer amendments.
2. A biodegradable Erosion Control Matting shall be placed over the topsoil throughout the swale cross section, fabric shall be held in place in accordance with the manufacturer's installation requirements. Anchor spacing shall be based on 3 fps flow over the fabric.
   a. Treatment area - high-density jute matting (Geojute Plus or other approved equal)
   b. All other areas - low-density jute matting (Econojute or other approved equal)
3. 2.5-3 inches of 2"-$\frac{3}{4}$" river run rock shall be placed over the matting evenly throughout the length and width of the swale.
4. Plant materials shall be placed in accordance with the plan and plant table as shown on approved plans.
5. The water quality swale treatment area plantings can be deemed "substantially complete" once active green growth has occurred to an average growth of 3" and plant density is an average of approx. 6 plants (minimum 1-inch plugs or equivalent) per square foot.
6. The facility shall be deemed acceptable to begin the maintenance period when plant growth and density matches the engineer's design as shown on the approved plans and all other requirements have been met. The engineer must certify the facility to be functional, in accordance with the approved plan design to begin the two-year maintenance period.

MAINTENANCE

1. The permittee is responsible for the maintenance of this facility for a minimum of two years following construction and acceptance of this facility per Chapter 2.
2. Irrigation is to be provided per separate irrigation plan as approved.
   Note: Irrigation needs are to be met using a temporary irrigation system with a timer during the dry season. Systems should be winterized during the wet season to assure longevity and guard against damage from freezing temperatures. Water source shall be as shown on the approved plans.
3. Engineer or Owners Representative is to visit and evaluate the site a minimum of twice annually (Spring and Fall). The landscaping shall be evaluated and replanted as necessary to ensure a minimum of 80% survival rate of the required vegetation and 90% aerial coverage. Non-native, invasive plant species shall be removed when occupying more than 20% of the site.
4. The facility shall be re-excavated and planted if siltation greater than 3 inches in depth occurs within the two-year maintenance period.

STANDARD DRAWING TITLE	DRAWING NUMBER
WATER QUALITY SWALE CONSTRUCTION & MAINTENANCE NOTES	SS-87
SCALE: N.T.S.	DATE: JUL' 09

City of Sherwood Oregon

Any alteration of this drawing may not be associated in any way with the City of Sherwood Standard Drawings

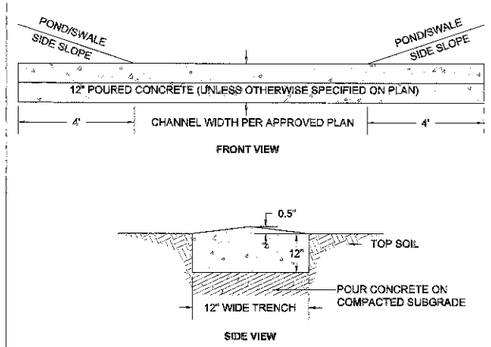

STANDARD DRAWING TITLE	DRAWING NUMBER
CONCRETE SPREADER DETAIL	
SCALE: N.T.S.	

RIPRAP:

- ROCK FOR RIPRAP SHALL BE ANGULAR IN SHAPE.
- THICKNESS OF A SINGLE ROCK SHALL NOT BE LESS THAN ONE-THIRD ITS LENGTH.
- ROUNDED ROCK WILL NOT BE ACCEPTED UNLESS APPROVED BY THE DISTRICT.

RIPRAP INSTALLATION:

- EXCAVATE BELOW FINISH GRADE TO DEPTH & DIMENSIONS SHOWN ON APPROVED PLANS.
- INSTALL WOVEN GEOTEXTILE FABRIC.
- PLACE RIP RAP TO FINISH GRADE.

- GRADE RIPRAP SHALL BE THE CLASS AND SIZE OF ROCK ACCORDING TO THE FOLLOWING:

CLASS 60	CLASS 100	CLASS 200	CLASS 700	CLASS 2000	PERCENT (BY WEIGHT)
WEIGHT OF ROCK (LBS)					
50-30	100-60	200-140	700-500	2000-1400	20
30-15	60-25	140-80	500-200	1400-700	30
15-2	25-2	80-8	200-20	700-40	40
2-0	2-0	8-0	20-0	40-0	10

STANDARD DRAWING TITLE	DRAWING NUMBER
RIP RAP DETAILS	SS-87
SCALE: N.T.S.	DATE: JUL' 09

Any alteration of this drawing may not be associated in any way with the City of Sherwood Standard Drawings

APPROVED
CONSTRUCTION PLANS
(See cover sheet approval for any conditions)
City of Sherwood
Engineering Division
Date: 7/1/13

NOTES:
1. ALL FITTINGS, FASTENERS, & AND FABRIC TIES SHALL BE HOT DIP GALV.
2. CONC SHALL BE MIN 2500 PSI @ 28 DAYS.
3. PROVIDE BRACE RAIL BETWEEN END POSTS AND LINE POSTS, LENGTHS AS REQ'D.
4. PROVIDE GATE STOPS AND HOOP RECEIVERS SET IN CONCRETE, EACH GATE.
5. PROVIDE EXTENSION ARMS ON LINE, END AND CORNER POSTS & GATE POSTS AT REQ'D.
6. PROVIDE SCOTT OPERATING SLACS WITH ALL WASTEWATER PUMP STATIONS.
7. CENTER BRACE RAIL NOT REQUIRED WITH FUSE HEIGHT OF 5' OR LESS.
8. ALL POSTS AND RAILS TO MATCH FENCE COLOR.

	NOMINAL DIA. (IN)	MATERIAL
LINE POST	2.00	GALV TUBULAR STL
END & CORNER POST	2.375	GALV TUBULAR STL
GATE FRAME	2.375	GALV TUBULAR STL
CHAIN LINK FABRIC		9 GA. VITREOUS OR BLACK PVC COATED FABRIC
	GATE OPENING	NOMINAL DIA
GATE POST	1'-0" OR 18"	4

	MATERIAL
BRACE & TIE	GALV TUBULAR STL
TENSION WIRE	GALV TUBULAR STL
TOP RAIL	GALV TUBULAR STL
BRACE RAIL	GALV TUBULAR STL
TIE WIRE	9 GA. VITREOUS OR BLACK PVC COATED
FABRIC	9 GA. VITREOUS OR BLACK PVC COATED

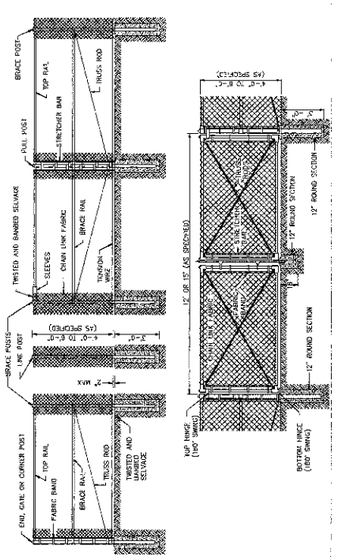

STANDARD DRAWING TITLE	DRAWING NUMBER
CHAIN LINK FENCE AND GATE	SS-104
SCALE: N.T.S.	DATE: JUL '09

City of Sherwood Oregon

Any alteration of this drawing may not be associated in any way with the City of Sherwood Standard Drawings

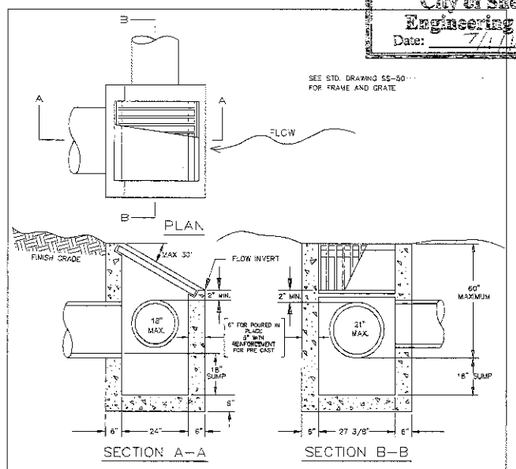

NOTES:
1. ALL PRE CAST SECTIONS SHALL CONFORM TO REQUIREMENTS OF ASTM C-478.
2. INSTALL STRUCTURE ON MINIMUM OF 8" OF 3/4" - 0" COMPACTED BASE MATERIAL.
3. PRE CAST REINFORCEMENT SHALL BE REBAR MEETING ASTM A615 GRADE 50 OR WELDED WIRE MEETING ASTM A497
4. ALL POURED IN PLACE CONCRETE SHALL HAVE A 28 DAY STRENGTH OF 3000 PSI AND SLUMP OF 2" TO 4".
5. PRE-CAST STRUCTURE'S CONFORMING TO O.D.O.T. TYPE G-2 CATCH BASIN DESIGN/WITH DITCH INLET TOP ARE AN ACCEPTABLE ALTERNATE. ALL GRATE MATERIALS SHALL MEET C.W.S. STANDARDS AS SHOWN ON DETAIL SS-50

STANDARD DRAWING TITLE	DRAWING NUMBER
DITCH INLET	SS-49
SCALE: N.T.S.	DATE: JUL '09

City of Sherwood Oregon

Any alteration of this drawing may not be associated in any way with the City of Sherwood Standard Drawings

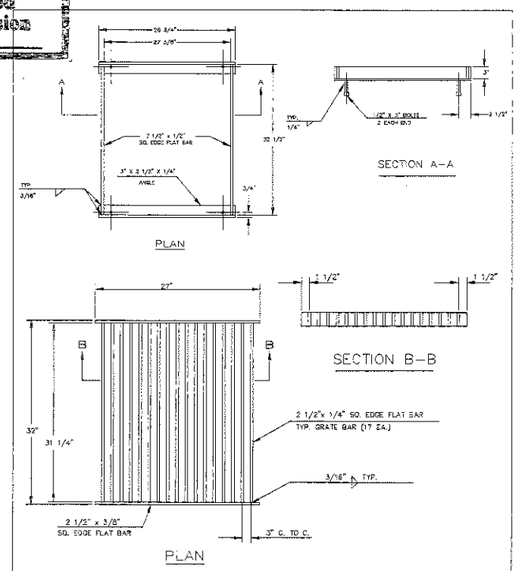

NOTE:
FRAME AND GRATE SHALL BE NEW STRUCTURAL ASTM A-36 FLAT BAR STEEL OR APPROVED EQUAL.

STANDARD DRAWING TITLE	DRAWING NUMBER
DITCH INLET FRAME AND GRATE	SS-50
SCALE: N.T.S.	DATE: JUL '09

City of Sherwood Oregon

Any alteration of this drawing may not be associated in any way with the City of Sherwood Standard Drawings

STORMWATER CONSTRUCTION DETAILS

PERMIT SET
LANGER FARMS REGIONAL PUBLIC STORMWATER FACILITIES
SHERWOOD OREGON
TAX LOT 300
WASHINGTON COUNTY TAX MAP 2S 1 29D

AKS ENGINEERING & FORESTRY
ENGINEERING · PLANNING
SURVEYING · FORESTRY
13910 SW GALBREATH DR., SUITE 100
SHERWOOD, OR 97140
PHONE: (503) 925-8799
FAX: (503) 925-8969

DESIGNED BY:	AHH
DRAWN BY:	RSW
CHECKED BY:	AHH
DRAWING NO.:	STM E2-C205
SCALE:	AS NOTED

PREPARED FOR:
LANGER GRAMOR, LLC.
19767 SW 72ND AVENUE
SUITE 100
TUALATIN, OR 97062

DATE: 6-21-13

REGISTERED PROFESSIONAL ENGINEER
56539PE
OREGON
JANUARY 15, 2003
ALEXANDER H. HURLEY
RENEWAL DATE: 6/30/15

JOB NUMBER
2929

SHEET
C207

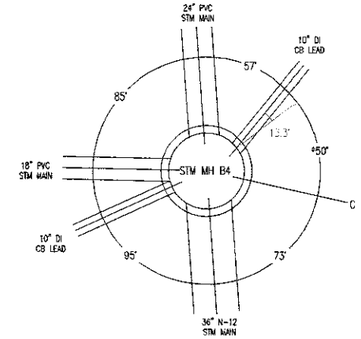

*10" PVC STM MAIN INTERSECTS MH AT 50'
PIPE ℄ IS OFFSET 0.58' FROM CENTER OF MH

STM MH B4
60" MH

SCALE: HORIZ 1"=5'
VERT 1"=5'

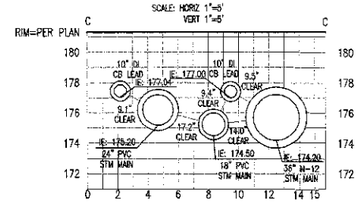

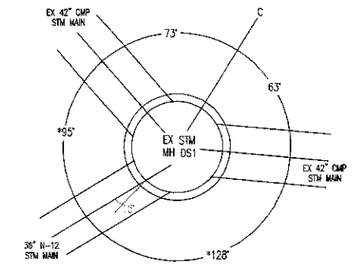

*36" N-12 STM MAIN INTERSECTS MH AT 95'
PIPE ℄ IS OFFSET 0.80' FROM CENTER OF MH

EX STM MH DS1
72" MH

SCALE: HORIZ 1"=5'
VERT 1"=5'

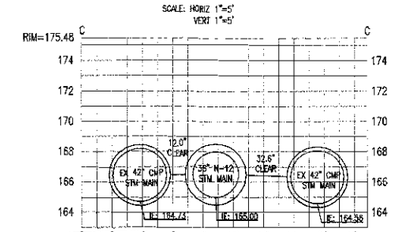

APPROVED
CONSTRUCTION PLANS
(See cover sheet approval for any conditions)
City of Sherwood
Engineering Division
Date: 4/1/13

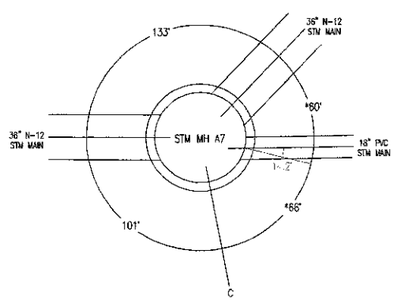

*18" PVC STM MAIN INTERSECTS MH AT 66'
PIPE ℄ IS OFFSET 0.75' FROM CENTER OF MH

STM MH A8
72" MH

SCALE: HORIZ 1"=5'
VERT 1"=5'

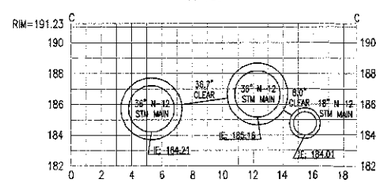

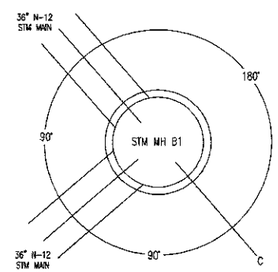

STM MH B1
72" MH

SCALE: HORIZ 1"=5'
VERT 1"=5'

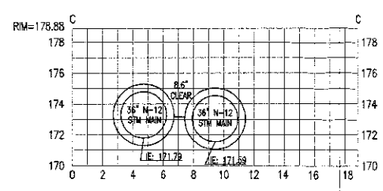

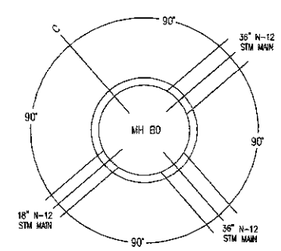

STM MH B0
72" MH

SCALE: HORIZ 1"=5'
VERT 1"=5'

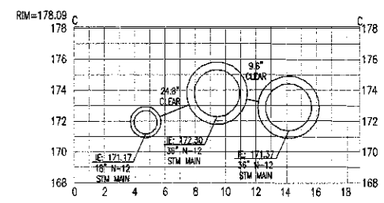

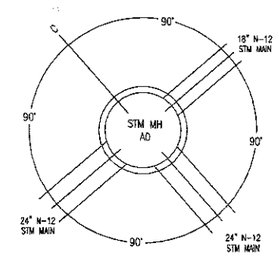

STM MH A0
60" MH

SCALE: HORIZ 1"=5'
VERT 1"=5'

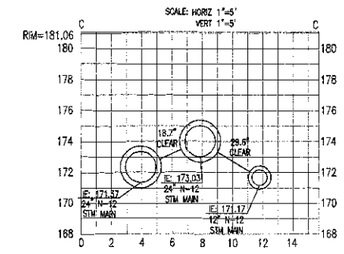

MANHOLE SECTIONS

PERMIT SET
LANGER FARMS REGIONAL PUBLIC STORMWATER FACILITIES
SHERWOOD OREGON
TAX LOT 300
WASHINGTON COUNTY TAX MAP 2S 1 29D

AKS ENGINEERING & FORESTRY
ENGINEERING · PLANNING
SURVEYING · FORESTRY
13910 SW GALBREATH DR., SUITE 100
SHERWOOD, OR 97140
PHONE: (503) 925-8799
FAX: (503) 925-8889

DESIGNED BY:	AHH
DRAWN BY:	RSW
CHECKED BY:	AHH
DRAWING NO.:	STM E2-C205
SCALE:	AS NOTED

PREPARED FOR:
LANGER GRAMOR, LLC.
19767 SW 72ND AVENUE
SUITE 100
TUALATIN, OR 97062

DATE: 6-21-13

REGISTERED PROFESSIONAL ENGINEER
OREGON
JANUARY 15, 2013
ALEXANDER H. HURLEY
RENEWAL DATE: 6/30/15

JOB NUMBER
2929

SHEET
C208

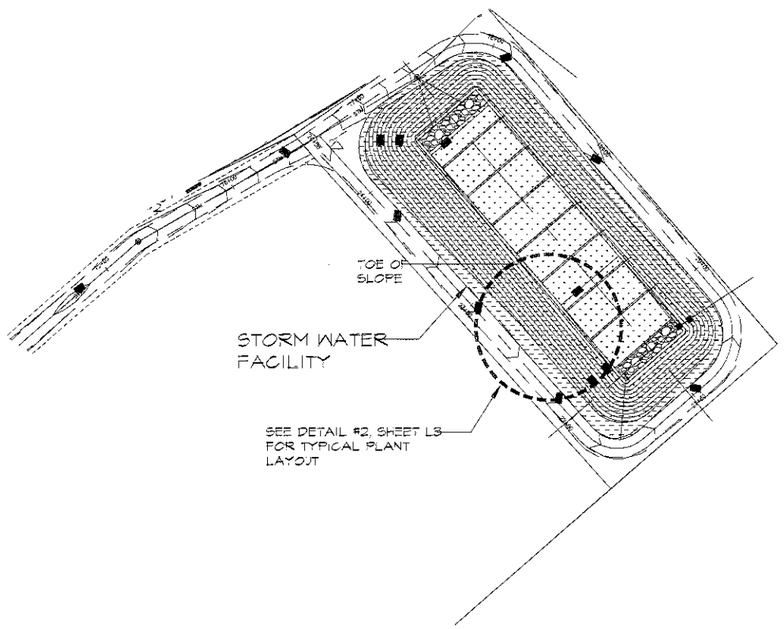

STORM WATER FACILITY LANDSCAPE LEGEND (Typical Planting Layout)

SYMBOL	COMMON NAME / BOTANICAL NAME	PLANT TYPE	WATER REQUIRE-MENTS	LIGHT REQUIRE-MENTS	MIN. SIZE	MIN. HEIGHT	ON-CENTER SPACING	SPACING
TREES								
BC	Bitter Cherry Prunus emarginata	Tree	Moist	Part	2 Gal.	2'	10'	Single
C	Cascara Rhamnus purshiana	Tree	Moist/Dry	Part	1 Gal.	2'	10'	Single
OA	Oregon Ash Fraxinus latifolia	Tree	Moist	Part	2 Gal.	3'	10'	Single
VM	Vine Maple Acer circinatum	Tree	Moist	Part	2 Gal.	2'	10'	Single
SHRUBS								
CR	Clustered Rose Rosa pisocarpa	Shrub	Moist	Sun	1 Gal.	1.5'	4'	Cluster
DS	Douglas Spirea Spirea douglasii	Shrub	Wet	Sun	1 Gal.	1.5'	4'	Cluster
OS	Oceanspray Holodiscus discolor	Shrub	Dry	Sun	1 Gal.	1.5'	4'	Single
PN	Pacific Ninebark Pysocarpus capitatus	Shrub	Moist	Shade	1 Gal.	2'	4'	Single
RD	Red-osier Dogwood Cornus sericea	Shrub	Wet	Part	1 Gal.	2'	4'	Cluster
RFC	Red Flowering Currant Ribes sanguineum	Shrub	Moist	Part	1 Gal.	2'	4'	Cluster
S	Serviceberry Amelanchier alnifolia	Shrub	Dry	Sun	1 Gal.	1.5'	4'	Single
SB	Snowberry Symphoricarpus albus	Shrub	Dry	Part	1 Gal.	1.5'	4'	Cluster

STORM WATER FACILITY LANDSCAPE LEGEND

SYMBOL	COMMON NAME / BOTANICAL NAME	PLANT TYPE	WATER REQUIRE-MENTS	LIGHT REQUIRE-MENTS	MIN. SIZE	MIN. HEIGHT	ON-CENTER SPACING	SPACING	QTY.
TREES									
	Bitter Cherry Prunus emarginata	Tree	Moist	Part	2 Gal.	2'	10'	Single	42
	Cascara Rhamnus purshiana	Tree	Moist/Dry	Part	1 Gal.	2'	10'	Single	42
	Oregon Ash Fraxinus latifolia	Tree	Moist	Part	2 Gal.	3'	10'	Single	44
	Vine Maple Acer circinatum	Tree	Moist	Part	2 Gal.	2'	10'	Single	42
SHRUBS									
	Clustered Rose Rosa pisocarpa	Shrub	Moist	Sun	1 Gal.	1.5'	4'	Cluster	145
	Douglas Spirea Spirea douglasii	Shrub	Wet	Sun	1 Gal.	1.5	4'	Cluster	66
	Oceanspray Holodiscus discolor	Shrub	Dry	Sun	1 Gal.	1.5'	4'	Single	145
	Pacific Ninebark Pysocarpus capitatus	Shrub	Moist	Shade	1 Gal.	2'	4'	Single	145
	Red-osier Dogwood Cornus sericea	Shrub	Wet	Part	1 Gal.	2'	4'	Cluster	66
	Red Flowering Currant Ribes sanguineum	Shrub	Moist	Part	1 Gal.	2'	4'	Cluster	145
	Serviceberry Amelanchier alnifolia	Shrub	Dry	Sun	1 Gal.	1.5'	4'	Single	145
	Snowberry Symphoricarpus albus	Shrub	Dry	Part	1 Gal.	1.5'	4'	Cluster	152
RUSHES/SEDGES									
	Spreading Rush Juncus patens	Herb	Moist	Part	plug	6"	6 per S.F.	Mass	18,180
	Small-fruited Bulrush Scirpus microcarpus	Herb	Wet	Sun	plug	6"	6 per S.F.	Mass	18,180
	Slough Sedge Carex obnupta	Herb	Moist	Part	plug	6"	6 per S.F.	Mass	18,180
	Rossi Sedge Carex rossi	Herb	Moist	Sun	plug	4"	6 per S.F.	Mass	18,180

NOTES:

1. Plant rushes/sedges in equal quantities in random configurations at 6 plugs per S.F. on bottom of storm water facility and up 2' on side slope.
2. Seed bottom of storm water facility and up 2' on side slope with Hedds & Hockins "Clean Water Wet Area" seed mix at rate of 1 lb. per 4,000 s.f..
3. Hydro-Seed side slopes of storm water facility starting at 2' up side slope from bottom of facility to road surrounding facility. Seed with Hedds and Hopkins "Clean Water Dry Area" seed mix at rate of 1 lb. per 1,000 s.f..
4. Provide Coconut Fiber or Geojute Plus netting on bottom of storm water facility and up 2' on side slope.
5. Provide Econojute netting on side slopes of storm water facility starting at 2' from bottom of facility to top of slope.
6. Provide 2.5"-3" layer of 2"-3/4" river run rock on bottom of storm water facility and 2' up side slope.
7. Provide 12 inch layer of specified topsoil with amendments as specified over entire storm water facility.
8. Plant Red-Osier Dogwood and Douglas Spirea in wet area at toe of slope and 5' up side slope.
9. Plant Pacific Ninebark and Clustered Rose in moist area up side slope from Dogwood and Spirea.
10. Plant Oceanspray, Serviceberry, Red Flowering Currant and Snowberry in dry area above Ninebark and Clustered Rose.
11. Plant shrubs at approximately 4' o.c. in clusters not not to exceed 10-15 shrubs.
12. Plant trees at approximately 10' o.c. Plant Oregon Ash near bottom of slope in wet/moist area.

APPROVED
CONSTRUCTION PLANS
(See cover sheet approval for any conditions)
City of Sherwood
Engineering Division
Date: 7/1/13

SCALE 1" = 50 FEET

REGISTERED 74 CHRISTOPHER J. FRESHLEY OREGON LANDSCAPE ARCHITECT

CHRISTOPHER FRESHLEY
LANDSCAPE ARCHITECT
1889 S.W. TAYLOR SUITE 200 • PORTLAND, OREGON 97205 • 503/226-1691
(E-MAIL PROCEEDINGS/REPRESENT)

STORMWATER FACILITY LANDSCAPE PLAN

PERMIT SET

LANGER FARMS
SUBDIVISION
SHERWOOD OREGON
TAX LOT 300
WASHINGTON COUNTY TAX MAP 2S 1 29D

AKS ENGINEERING & FORESTRY
ENGINEERING • PLANNING
SURVEYING • FORESTRY
13910 SW GALBREATH DR., SUITE 100
SHERWOOD, OR 97140
PHONE: (503) 925-8799
FAX: (503) 925-8969

DESIGNED BY:	
DRAWN BY:	CF
CHECKED BY:	CF
DRAWING NO.:	2829CXMPL
SCALE:	AS NOTED

PREPARED FOR:
LANGER FAMILY, LLC.
14958 SW TUALATIN-SHERWOOD RD
SHERWOOD, OR 97140

DATE: 2.7.2013

JOB NUMBER

SHEET
L1

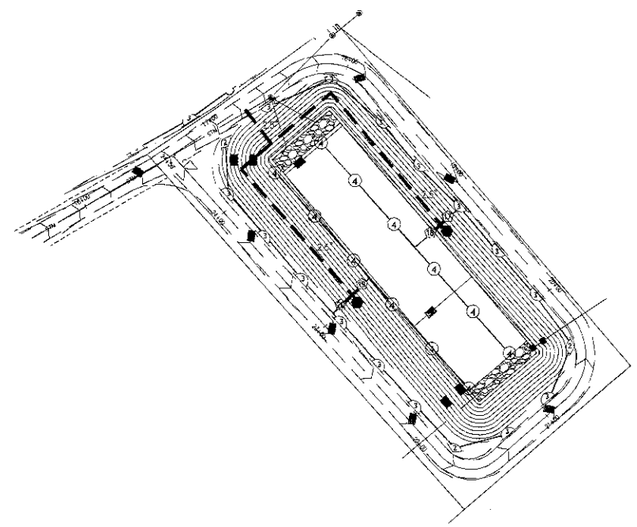

IRRIGATION LEGEND

IRRIGATION HEAD LEGEND

SYMBOL	PATTERN	COVERAGE	GPM	MANUF. & CATALOGUE NO.
	Part Cir.	37' R	2.07	Rainbird 5004-S-PL-PC-SAM-R - 2.0 NOZZLE
	Part Cir.	40' R	3.09	Rainbird 5004-S-PL-PC-SAM-R - 3.0 NOZZLE
	Part Cir.	42' R	4.01	Rainbird 5004-S-PL-PC-SAN-R - 4.0 NOZZLE
	Full Cir.	47' R	6.03	Rainbird 5004-S-PL-FC-SAM-R - 8.0 NOZZLE

NOTES:

1. Static Pressure - 75 PSI @ Point of Connection, Field Verify.
2. Design Pressure - Rotor Heads = 45 psi
3. At Vegetative Corridor and Stormwater Swale, mount Rainbird 5004 Shrub Heads on 36" high x 2" diameter round stake and strap riser with (2) stainless steel worm gear clamps. Use grey schedule 80 PVC for riser. See XXX Detail 13.

GENERAL EQUIPMENT LEGEND

- Class 200 PVC pipe for lateral lines, bury minimum 12 inches.
- Class 200 PVC pipe for supply lines, bury minimum 12 inches.
- M — IRRIGATION WATER METER - To be provided at Sentinel Self Storage Annex SEE SENTINEL SELF STORAGE ANNEX PLANS
- C — Rainbird Model ESP-28LXME Irrigation Controller with LXMM Metal Pedestial. Mount on concrete base as per manufacturer's recommendations.
- B — BACKFLOW PREVENTION DEVICE, 2.5" Size - To be provided at Sentinel Self Storage Annex SEE SENTINEL SELF STORAGE ANNEX PLANS
- Isolation Ball Valve - Size same size as mainline.
- 2 — Rainbird Model PEB Electric Remote Control Valve and Valve Number.
- Quick Coupler

CONTROL VALVE KEY

Control Valve Number	1	2	3	4	5	6	7	8	9	10	11	12
Gallons Per Minute	43	50	48	48	48	46	46	48	45	40	48	48
Control Valve Size	1.5"	1.5"	1.5"	1.5"	1.5"	1.5"	1.5"	1.5"	1.5"	1.5"	1.5"	1.5"

CONTROL VALVE KEY

Control Valve Number	13	14	15	16
Gallons Per Minute	39	48	41	49
Control Valve Size	1.5"	1.5"	1.5"	1.5"

GENERAL NOTES

1. This plan is schematic. Place all piping, valves, equipment, etc. shown in paved areas in planting beds wherever possible. Locate inside property lines.
2. Place sleeving where required prior to asphalt/concrete work. Co-ordinate with other trades. Schedule 40 PVC pipe for sleeves under drives. Size 2 times diameter of pipe, provide seperate schedule 40 pipe for control wire.
3. Verify the correlation between ground measurements and drawings prior to any work. Notify the Owner's representative of any discrepancies immediately.
4. Make field adjustments as required. The contractor shall not willfully install the irrigation system as per drawing when it is obvious in the field that conditions vary from the drawings.
5. Verify the water pressure at the point of connection, submit test results to the Engineer for approval prior to any work.
6. Co-ordinate head locations with trees and shrubs to insure complete coverage.
7. The entire installation of the irrigation system shall fully comply with all local and and state codes.

SCALE 1" = 50 FEET

50 0 25 35 45 60

APPROVED
CONSTRUCTION PLANS
(See cover sheet approval for any conditions)
City of Sherwood
Engineering Division
Date: 7-11-13

REGISTERED 74 CHRISTOPHER J. FRESHLEY OREGON LANDSCAPE ARCHITECT

CHRISTOPHER FRESHLEY
LANDSCAPE ARCHITECT
4800 S.W. TAYLOR, SUITE 300 • PORTLAND, OREGON 97205 • (503) 292-9501
(E-MAIL: FRESHLEY@FRESHLEYPROJECT)

PERMIT SET

STORMWATER FACILITY IRRIGATION PLAN

LANGER FARMS SUBDIVISION

SHERWOOD OREGON
TAX LOT 300 WASHINGTON COUNTY TAX MAP 2S 1 29D

AKS ENGINEERING & FORESTRY
ENGINEERING • PLANNING
SURVEYING • FORESTRY
13910 SW GALBRAITH DR., SUITE 100
SHERWOOD, OR 97140
PHONE: (503) 925-8799
FAX: (503) 925-8889

DESIGNED BY:	
DRAWN BY:	CF
CHECKED BY:	CF
DRAWING NO.:	2929CXMPL
SCALE:	AS NOTED

PREPARED FOR:
LANGER FAMILY, LLC.
14958 SW TUALATIN-SHERWOOD RD
SHERWOOD, OR 97140

DATE: 2.7.2013

JOB NUMBER

SHEET
L2

STORM WATER FACILITY LANDSCAPE LEGEND
(Typical Planting Layout)

SYMBOL	COMMON NAME / BOTANICAL NAME	PLANT TYPE	WATER REQUIREMENTS	LIGHT REQUIREMENTS	MIN. SIZE	MIN. HEIGHT	ON-CENTER SPACING	SPACING
TREES								
BC	Bitter Cherry Prunus emarginata	Tree	Moist	Part	2 Gal.	2'	10'	Single
C	Cascara Rhamnus purshiana	Tree	Moist/Dry	Part	1 Gal.	2'	10'	Single
OA	Oregon Ash Fraxinus latifolia	Tree	Moist	Part	2 Gal.	3'	10'	Single
VM	Vine Maple Acer circinatum	Tree	Moist	Part	2 Gal.	2'	10'	Single
SHRUBS								
CR	Clustered Rose Rosa pisocarpa	Shrub	Moist	Sun	1 Gal.	1.5'	4'	Cluster
DS	Douglas Spirea Spirea douglasii	Shrub	Wet	Sun	1 Gal.	1.5'	4'	Cluster
OS	Oceanspray Holodiscus discolor	Shrub	Dry	Sun	1 Gal.	1.5'	4'	Single
PN	Pacific Ninebark Physocarpus capitatus	Shrub	Moist	Shade	1 Gal.	2'	4'	Single
RD	Red-osier Dogwood Cornus sericea	Shrub	Wet	Part	1 Gal.	2'	4'	Cluster
RFC	Red Flowering Currant Ribes sanguineum	Shrub	Moist	Part	1 Gal.	2'	4'	Cluster
S	Serviceberry Amelanchier alnifolia	Shrub	Dry	Sun	1 Gal.	1.5'	4'	Single
SB	Snowberry Symphoricarpos albus	Shrub	Dry	Part	1 Gal.	1.5'	4'	Cluster

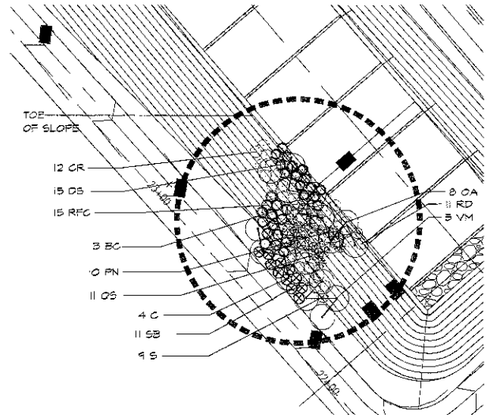

TYPICAL PLANTING LAYOUT

1 STORM WATER FACILITY
SCALE: 1" = 30'

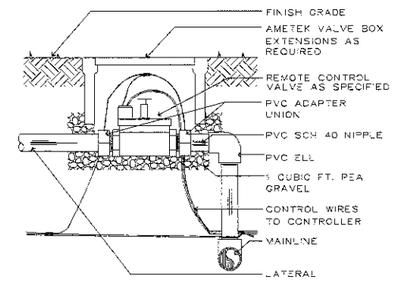

4 ELECTRIC VALVE ASSEMBLY
SCALE: NTS

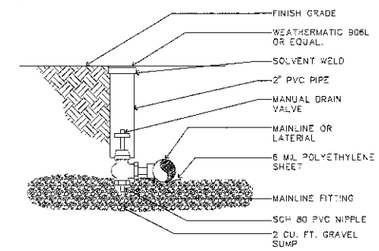

5 MANUAL DRAIN VALVE
SCALE: NTS

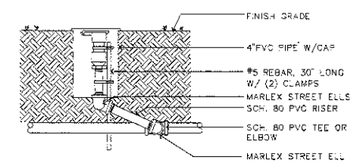

6 QUICK COUPLER
SCALE: NTS

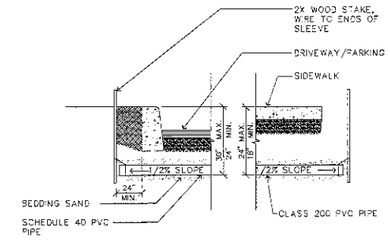

7 SLEEVE
SCALE: NTS

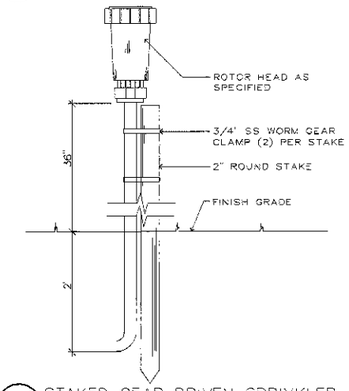

8 STAKED GEAR DRIVEN SPRINKLER
SCALE: NTS

GALLON PER MINUTE		PIPE SIZE & CLASS	
0 - 10	GALLONS	3/4"	CLASS 200
11 - 15	GALLONS	1"	CLASS 200
16 - 25	GALLONS	1 1/4"	CLASS 200
26 - 40	GALLONS	1 1/2"	CLASS 200
41 - 55	GALLONS	2"	CLASS 200
56 - 85	GALLONS	2 1/2"	CLASS 200
86 - 125	GALLONS	3"	CLASS 200

9 PIPE SIZE SCHEDULE – Lateral Lines
SCALE: NTS

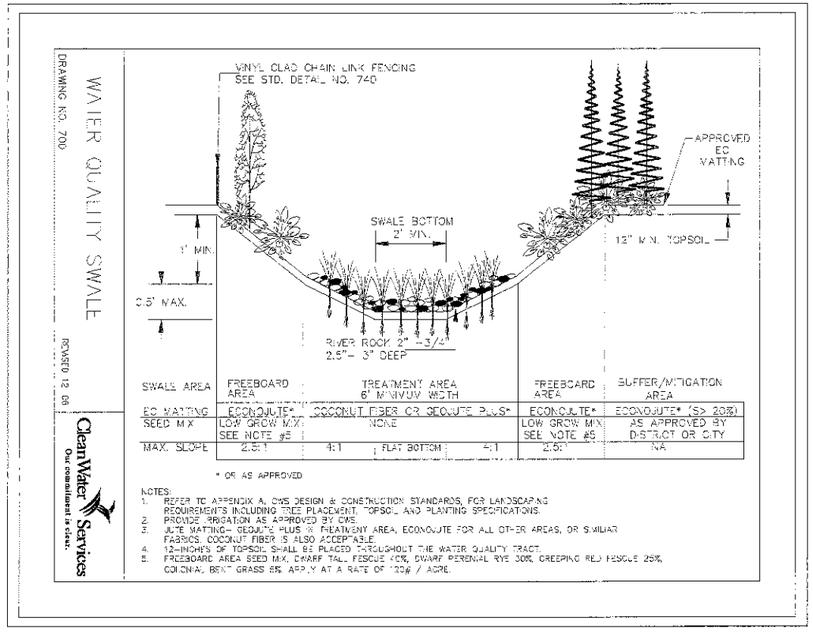

SWALE AREA	FREEBOARD AREA	TREATMENT AREA 6' MINIMUM WIDTH			FREEBOARD AREA	BUFFER/MITIGATION AREA
EC MATTING	ECONOJUTE*	COCONUT FIBER OR SEQUOTE PLUS*			ECONOJUTE*	ECONOJUTE* (S> 20%)
SEED MIX	LOW GROW MIX SEE NOTE #5	NONE			LOW GROW MIX SEE NOTE #5	AS APPROVED BY DISTRICT OR CITY
MAX. SLOPE	2.5:1	4:1	FLAT BOTTOM	4:1	2.5:1	NA

* OR AS APPROVED

NOTES:
1. REFER TO APPENDIX A, CWS DESIGN & CONSTRUCTION STANDARDS, FOR LANDSCAPING REQUIREMENTS INCLUDING TREE PLACEMENT, TOPSOIL AND PLANTING SPECIFICATIONS.
2. PROVIDE IRRIGATION AS APPROVED BY CWS.
3. JUTE MATTING– SEQUOTE PLUS IN TREATMENT AREA, ECONOJUTE FOR ALL OTHER AREAS, OR SIMILIAR FABRICS. COCONUT FIBER IS ALSO ACCEPTABLE.
4. 12–INCHES OF TOPSOIL SHALL BE PLACED THROUGHOUT THE WATER QUALITY TRACT.
5. FREEBOARD AREA SEED MIX, DWARF TALL FESCUE 60%, SWARF PERENIAL RYE 30%, CREEPING RED FESCUE 25%, COLONIAL BENT GRASS 5%. APPLY AT A RATE OF 120# / ACRE.

2 WATER QUALITY SWALE
SCALE: NTS

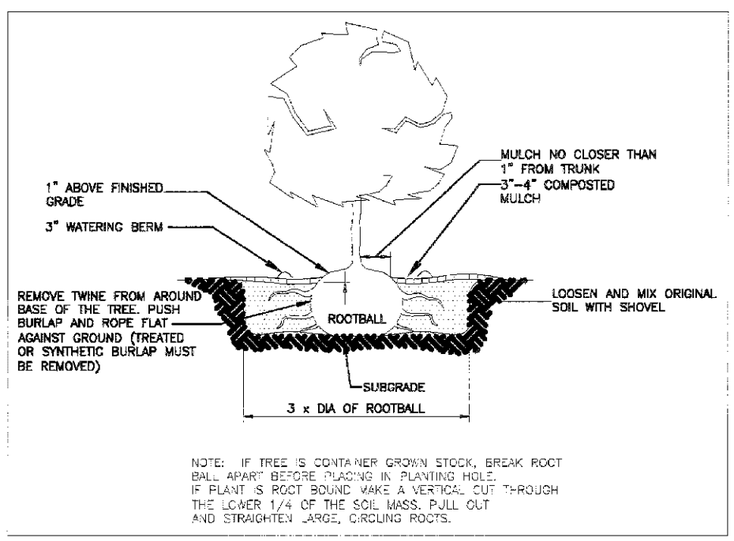

NOTE: IF TREE IS CONTAINER GROWN STOCK, BREAK ROOT BALL APART BEFORE PLACING IN PLANTING HOLE. IF PLANT IS ROOT BOUND MAKE A VERTICAL CUT THROUGH THE LOWER 1/4 OF THE SOIL MASS. PULL OUT AND STRAIGHTEN LARGE, CIRCLING ROOTS.

3 TREE PLANTING–CONTAINER/BURLAPPED
CLEAN WATER SERVICES-DRAWING NO. 780
SCALE: NTS

APPROVED
CONSTRUCTION PLANS
(See cover sheet approval for any conditions)
City of Sherwood
Engineering Division
Date: 7/1/13

REGISTERED 74 CHRISTOPHER A. FRESHLEY OREGON LANDSCAPE ARCHITECT

CHRISTOPHER FRESHLEY
LANDSCAPE ARCHITECT
1820 S.W. TAYLOR STREET, NO. 1 PORTLAND, OREGON 97205 • (503)222-1001
E-MAIL: FRESHLEY@FRESHLEYPDX.COM

PERMIT SET

STORMWATER FAC. LANDSCAPE AND IRRIGATION DETAILS

LANGER FARMS
SUBDIVISION
SHERWOOD OREGON
TAX LOT 300
WASHINGTON COUNTY TAX MAP 2S 1 29D

AKS ENGINEERING & FORESTRY
ENGINEERING • PLANNING
SURVEYING • FORESTRY
13910 SW GALBREATH DR., SUITE 100
SHERWOOD, OR 97140
PHONE: (503) 925-8799
FAX: (503) 925-8969

DESIGNED BY:	
DRAWN BY:	CF
CHECKED BY:	CF
DRAWING NO.:	2929CXMPL
SCALE:	AS NOTED

PREPARED FOR:
LANGER FAMILY, LLC.
14858 SW TUALATIN-SHERWOOD RD
SHERWOOD, OR 97140

DATE: 2.7.2013

JOB NUMBER

SHEET
L3

SECTION 02750 IRRIGATION

PART 1 - GENERAL

1.01 SCOPE: Furnish labor, material, equipment and services necessary for installation of new irrigation system as shown on drawings and specified herein.

1.02 RELATED WORK IN OTHER SECTIONS:
- A. Section 02950 - LANDSCAPING

1.03 RELATED WORK BY OTHERS:
- A. Water meter at point of connection.
- B. Backflow Prevention device. Landscape Contractor to coordinate with appropriate trades.
- C. Provisions for electrical service to controller. Landscape Contractor to coordinate with appropriate trades.

1.04 QUALITY ASSURANCE:
- A. Supervision: Provide at least one person who shall be present at all times during execution of this portion of work and who shall be thoroughly familiar with the type of materials being installed and the manufactrers recommended, methods of installation and who shall direct all work performed under this section.
- B. Restrictions: Conform to the "Uniform Plumbing Code" as adopted and modified by the state of Oregon and all legally constituted authorities having jurisdiction.
- C. Materials and Equipment: New materials and equipment of brands as indicated on drawings and specified herein.

1.05 DESIGN AND PLAN:
- A. Layout of irrigation system is schematic.
- B. Follow as closely as possible.

1.06 VERIFICATION OF EXISTING CONDITIONS:
- A. Before proceeding with the installation of any section of the irrigation system, verify all existing conditions including all utilites and easements.

1.07 VERIFICATION OF DIMENSIONS:
- A. Before proceeding with the installation of any section of the irrigation system, check and verify correlation between ground measurements and Drawings.
- B. Advise Engineer of discrepancies before proceeding.

1.08 VERIFICATION OF WATER PRESSURE:
- A. Verify water pressure at point of connection.
- B. Submit pressure test results to Engineer for approval prior to any work.

1.09 PROTECTION OF UNFINISHED WORK:
- A. Protect work at all times.
- B. Keep rock, dirt, gravel, debris and foreign materials from entering piping, valves and other irrigation equipment.

1.10 ENVIRONMENTAL CONDITIONS:
- A. No solvent welding of PVC pipe in freezing weather.
- B. Solvent welding of PVC pipe under cover only during rainy weather.

1.11 UTILITIES:
- A. Be responsible for location of underground utilities and easements.
- B. Protect active utilities. If encountered, notify persons owning same.

1.12 STORAGE:
- A. Store on job site only as approved.
- B. Be responsible for security and protection.
- C. Store no PVC pipe nor fittings in direct sunlight.

1.13 EQUIPMENT FOR OPERATION:
- A. Provide Owner with the following operation equipment.
- B. Turn over to Owner at time of Final Inspection.
  1. (2) Keys for irrigation controller.
  2. (2) snap-lock unlocking tools-for valve box covers.
  3. (2) quick coupling valve coupler.
  4. (2) hose swivel.
  5. (2) lock cap key, Rain Bird 2049.
  6. (2) valve operating key, 30-inch handle length.

1.14 RECORD DRAWINGS:
- A. Maintain current with work progress, one red pencil marked print showing all deviations from drawings occurring during installation.
- B. Show locations of stubouts, manual drains, pipe lines or other subsurface features as installed.
- C. Show dimension reference from subsurface features to permanent structural or surface elements.
- D. Submit reproducable print at end of project.
- E. Place 1 reduced size laminated print inside controller door.

1.15 SUBMITTALS:
- A. Submit to Engineer within 30 days after award of contract. Product data including but not limited to:
  1. Irrigation Controller, control valves, pipe, fittings, heads, control wire, wire splices, vavle boxes, solvent cement, drain vavles, gate valves and all others products necessary for complete system.
  2. Static water pressure at point of connection.
- B. Submit to Engineer at time of inspection for final approval.
  1. As-Built irrigation print.
  2. Copy of guarantees, warranties or affidavits applicable to equipment or materials beyond Contractor's 1-year guarantee period.
  3. Manufacturers catalog cuts describing all equipment and materials used.
  4. Names, addresses and phone numbers of manufacturers and local suppliers of equipment.
  5. Written operating and maintenance instructions for all electrical or mechanical equipment used.
- C. Submit three (3) complete copies of the above submittals in hard cover binder.

1.16 GUARANTEE:
- A. Guarantee the irrigation system, or any part thereof, against defective material or workmanship for one (1) year from the date of acceptance. acceptance.
- B. Repair any settling of backfilled trenches occurring during a one (1) year period after final acceptance.
- C. Include restoration of planting, paving or other improvements of any kind associated with corrections.
- D. Make corrections without expense to Owner.

PART 2 - PRODUCTS

2.01 GENERAL:
- A. New materials and equipment.
- B. Brands and types as specified herein.
- C. Substitutions or equals only by written approval of the Engineer.

2.02 IRRIGATION HEADS:
- A. Construction as specified by model number reference.
- B. Manufacturer's catalog numbers indicated on plan.

2.03 PIPE AND FITTINGS:
- A. PVC Pipe Mainline: PVC pipe, Polyvinyl Chloride Plastic: PVC 1120, Class 200, Type I, normal impact, I.P.S., NSF approved plain and/or bell end: color white: meeting requirements ASTM D2241 and D1784.
- B. PVC Pipe Laterals: PVC pipe, Polyvinyl Chloride Plastic: PVC 1120, Class 200, Type I, normal impact, I.P.S., NSF approved plain and/or bell end: color white: meeting requirements ASTM D2241 and D1784.
- C. PVC Pipe Fittings: PVC 1120, Schedule 40, Type I, normal impact, I.P.S., NSF approved: meeting requirements of ASTM D 2466-74.
- D. Galvanized Pipe and Fittings: Standard weight pipe, hot dipped galvanized and threaded. Threaded cast iron or galvanized malleable fittings.
- E. PVC Riser: PVC 1120, Type I, normal impact I.P.S., NSF approved Schedule 80 PVC, conform to PS 21-70. Cut to required lengths threaded both ends, color dark grey.

2.04 SLEEVES:
- A. Under road - Provided by others.

2.05 PVC SOLVENT CEMENT:
- A. NSF approved solvent for PVC to 4" pipe size.
- B. Meeting requirements of ASTM D 2564-73a, #705.

2.06 PVC PRIMER AND CLEANER: Weld-on P-70 or equal.

2.07 ISOLATION BALL VALVE: Watts series WBV forged brass ball valve, standard port, 400 WOG.

2.08 MANUAL DRAIN VALVE: Brass globe valve, 1/2" size with cross-type wheel.

2.09 QUICK-COUPLING VALVE:
- A. One piece, double slot, 3/4" inlet with vinyl cover and lock top.
- B. Rain Bird Model or equal.

2.10 QUICK-COUPLING VALVE KEY: Rain Bird or equal.

2.11 LOCK CAP KEY: Rain Bird or equal.

2.12 HOSE SWIVEL: Rain Bird or equal.

2.13 LOCKING LID AND KEY:
- A. Rainbird or equal.

2.14 VALVE BOX: "Ametek" Economy, Standard and Jumbo sized boxes, extensions and locking covers where applicable.

2.15 DRAINAGE ROCK: 1-1/2 inch minus clean, washed round rock.

2.16 REMOTE CONTROL VALVE:
- A. Refer to drawing.

2.17 BACKFLOW PREVENTION DEVICE:
- A. Provided by other.

2.18 CONTROL WIRE: Type UF bearing U/L label for direct underground burial, NEC Class II circuits. AWG sizes, Refer to sizing chart, follow manufacturer's recommendations

2.19 ELECTRIC CONNECTORS: 3M DBY splice connectors.

PART 3 - EXECUTION

3.01 GENERAL:
- A. Install materials and equipment in strict accordance with manufacturer's written specification and recommendations.
- B. Comply with local and state codes.
- C. Maintain job premises clean and free from accumulations of debris or disorder at all times. Remove equipment and surplus materials from each area of work as completed.
- D. Leave no work in condition that would jeopardize other persons or property.
- E. Conduct mainline pressure test prior to backfilling in presence of Owner's Representative. Test at 100 static pressure. Test is acceptable if no more than 5psi loss after 1 hour.

3.02 TRENCH EXCAVATION:
- A. Straight or "snaked" slightly.
- B. Slope bottom uniformly, 1/2% minimum grade to drain.
- C. Trench depth 12 inches minimum (lateral lines), 18 inches minimum (supply lines), & 24 inches maximum depth: bottoms free from sharp rock or objects that may damage pipe.
- D. Trench width sufficient to allow proper tamping of backfill around pipe.
- E. Keep topsoil separate from subsoils. Replace in order of removal.

3.03 TRENCH BACKFILL:
- A. Do no backfilling until approval of pressure test.
- B. Use excavated soil or specified backfill sand bedding materials.
- C. Material free from rock and/or debris that may damage pipe or prevent proper compaction.
- D. Place 6-inch maximum lifts and compact thoroughly.
- E. Place mainline backfill only when pipe is filled with water: 25 PSI pressure minimum.

3.04 INSTALLATION OF PIPE:
- A. Sizes, type as specified.
  1. Lay with support beneath entire lengths.
  2. Slope all pipe to gravity drain.
  3. Snake PVC piping to allow for expansion and contraction.
  4. Combine runs in common trench where feasible with 3-inch minimum separation.
  5. Flush lines prior to installation of valves and irrigation heads.
- B. Cutting and Joining:
  1. Cut pipe square, deburr and remove all surface contaminants or moisture.
  2. Chamfer all cut ends.
  3. Apply primer and solvent cement in accordance with manufacturers recommendations.
  4. Make threaded joints leak resistant, with freedom of movement.
  5. Use teflon thread sealant for threaded joints.
  6. Clean out threads and use tape or compound joint sealants for all galvanized pipe connections. Leave no more than two (2) threads showing at joints.

3.05 INSTALLATION OF SLEEVING:
- A. Sleeving provided by others.

3.06 INSTALLATION OF VALVES:
- A. Types, sizes and locations as shown on drawings and equipment legend.
  1. Install in accordance with details for each type.
  2. Install manual drain valves at locations to completely drain all main lines.
  3. Install minimum one manual drain per zone.

3.09 INSTALLATION OF IRRIGATION HEADS:
- A. Types and locations as indicated on drawings: Install in accordance with details for each type.
- B. Adjust and balance:
  1. Adjust and balance each system zone.
  2. Achieve uniform area coverage by all head types.

3.10 INSTALLATION OF CONTROL WIRE:
- A. For wire sizes, refer to wire sizing chart published by manufacturer of control valves.
- B. Use specified electrical connectors at all splices. Place all splices in valve boxes, and note locations on as-built record drawings.
- C. Bundle wire together with electrical tape at 10-foot intervals. Provide 12-inch expansion coils every 100 feet where runs exceed this length.
- D. Place wire at bottom of pipe runs to provide protection.
- E. Provide two extra wires running continuously to each control valve similar to common for use if wire fails, color to be different. Label as "extra wire" at controller.
- F. Provide (9) extra control wires to Sentinel Self Storage facility as shown on the drawings.

END OF SECTION

SECTION 02950 LANDSCAPING

PART 1 - GENERAL

1.01 SCOPE OF WORK: Placement of on-site stockpiled &/or imported topsoil: site and soil preparation: establishment of fine finish grading: installation of landscape construction details: supply and installation of trees, shrubs, wetland plantings and seedings: mulching of planting bed areas: and maintenance and warranty of planted areas.

1.02 QUALITY ASSURANCE: All plant material and planting locations are to be approved by a wetlands biologist or mitigation specialist from Schott & Associates prior to planting. During planting, Schott is to be on site.

1.03 COORDINATION: Coordinate placement of on-site stockpiled topsoil and quantity required with General Contractor.

1.04 PLANT MATERIAL: Provide in accordance with species, sizes, and quantities indicated on the drawings.
- A. Plant substitution is not permitted. The specified seed mix in the plant schedule is to be adhered to and used for all areas designated.
- B. Furnish certificate of compliance with indicated seed mixture and any certificates of inspection and and compliance as required by Federal and State laws and regulations for plant and soil additives.

1.05 GUARANTEE AND REPLACEMENT:
- A. Guarantee plant materials and related workmanship of installation, beginning after written acceptance of work, for two years from the date of planting. Any planted material (woody, herbaceous, or seeded) which proves to be other then specified or is not in vigorous condition within a period of two years from acceptance of the work will be replaced by the Contractor without cost to the Owner. An 80% minimum survival rate is expected after five years. NOTE: PLANTS MUST BE BONDED AND MAINTAINED FOR TWO YEARS.
  1. Replace plant material not surviving or in poor condition during guarantee period.
  2. Correct deficiencies in soil or drainage conditions when attributable to plant losses, prior to replacement.
  3. Perform all replacement work in accordance with original specifications at no additional cost to Owner.
  4. Damage or loss of plant materials due to vandalism, freezing, or acts of neglect by others, is exempt from Contractor's replacement responsibility.
- B. Perform replacement work when requested by Owner within fourteen (14) days after notification.
  1. Plant replacements subject to seasonal limitations may be performed at a later date when, in the judgement of the Engineer, survival of replacements is jeopardized by weather or other conditions.
  2. Advise Owner or Owner's Representative in writing when replacement work is performed. Include specific instructions for immediate care of same.

1.06 SUBMITTALS:
- A. Submit 1 quart sample of textural soil ammendment and mulch to Engineer for review.
- B. Submit product data for soil amendments.
- C. Submit product data for wetlands construction sediment fencing and staking materials.
- D. Submit product data for all seed mixs.
- E. Submit product data for Hydro Seed components including but not limited to: tackifier, organic component, mixture color and proposed applicator.
- F. Submit product data for all Erosion Control Netting and Fasteners.
- G. Submit list of all plant materials, sizes suppliers, etc.

1.07 SITE CONDITIONS/DAMAGE/CLEANUP:
- A. Place construction sediment fence per Clean Water Services standards between existing wetlands and new construction areas in Vegetated Corridor. Fence shall remain in place until planted vegetation is established as determined by Schott and/or the permitting agency. Once the vegetation is established, the construction sediment fence shall be removed.
- B. Locate all underground utilities prior to digging or driving stakes.
- C. Any existing buildings, equipment, underground utilities, walks, roads, and/or forms damaged by the Contractor are to be replaced and/or repaired at the Contractor's expense, in a manner satisfactory to the Owner's representative before final payment is made.
- D. The Contractor is to be responsible for keeping planted areas free of debris, rock and sand throughout the course of work. Upon completion of the contract, the Contractor's to remove all surplus material, equipment, and debris from the site. All planted areas are to be rake-clean.

1.08 SCHEDULE:
- A. Any earthwork must be approved by the project representative prior to commencement of such work. At that time, it will be determined what extra measures, if any, should be taken to prevent damage due to earthwork in saturated soils.
- B. Planting is to occur during the cool season months (November to March) to take advantage of seasonal rains and the greater availability of plant material.

1.09 EXISTING VEGETATION:
- A. Protect all existing native vegetation as listed in the most current version of Metro or Native Plant List, whichever is more comprehensive. Any existing vegetation damaged by Contractor will be replaced with plants of equal or better size and condition at contractor's expense.

PART 2 - PRODUCTS

2.01 TEXTURAL SOIL AMENDMENTS:
- A. Soil amendment is to consist of screened mill-run fir and/or hemlock sawdust blended with composted manure or air digested sewage sludge. The blended ingredients are to be composted to a minimum of one year. Bassett Western Fertil - Mulch or approved equal.

2.02 MULCH MATERIAL:
- A. Free from contaminants, noxious weed seed, mushrooms, and all foreign materials harmful to plant life.
  1. Shredded wood and/or bark.

2.03 PLANT MATERIALS:
- A. General, species, variety, quantity and size.
  1. As indicated on the plans.
  2. Nomenclature - conform to names given in Standardized Plant Names, 1942 edition or that accepted in localized nursery trade.
  3. Meet requirements of American Standard for Nursery Stock, 1973 edition ANSI Z60.1
- B. Rooted plants are to be first quality, well-foliated, with well-developed root systems, and normal well-shaped trunks, limbs, stems, and heads. Schott will approve for quality conformance. All rooted plant material is to be labeled by genus, species and variety. Plants deemed unsuitable may be rejected before or after delivery. All plant material is to be free from damage, disease, insects, insect eggs and larvae.

2.04 SEEDING MATERIALS:
- A. Storm Water Facility Pond Bottom Seed Mix:
  1. "Clean Water Wet Area" seed mix as approved by Clean Water Services and manufactured by Hobbs & Hopkins Ltd., Portland, Oregon (503) 239-7518.
- B. Storm Water Facility Side Slope Seed Mix:
  1. "Clean Water Dry Area" seed mix as approved by Clean Water Services and manufactured by Hobbs & Hopkins Ltd., Portland, Oregon (503) 239-7518.

2.06 TOPSOIL:
- A. Topsoil is defined as material being a friable loam surface soil found at a depth, in its natural state, of less than 18". Topsoil shall be free from subsoil, clay lumps larger than 2 inches, debris, turf, weeds, roots, contaminants, or other objectionable material. Topsoil on site meeting these specifications may be used. Furnish additional topsoil to match existing if on-site topsoil quantities are insufficient at no additional cost at no additional cost to owner.

2.06 WATER:
- A. Metered domestic service for Contractor's use is provided on site.
- B. Be responsible for conveying any application equipment required to perform the work.

2.07 STORM WATER FACILITY EROSION CONTROL NETTING:
- A. Pond Bottom and 2' up Side Slope.
  1. Coconut Fiber or Geojute Plus as specified by Clean Water Services including manufacturer's fasteners with anchor spacing based on 3fps flow over the fabric.
- B. Side Slope (Freeboard Area).
  1. Econojute as specified by Clean Water Services including manufacturer's fasteners.
- C. Other Areas with slopes less than 20%.
  1. Econojute as specified by Clean Water Services including manufacturer's fasteners.

2.08 STORM WATER FACILITY ROCK:
- A. River run rock 2"-3/4" as per Clean Water Services detail.

2.09 HYDRO MULCH MATERIALS:
- A. Mulch: 100% virgin wood fiber or wood cellulose fiber mulch from Douglas Fir or Western Hemlock dyed to facilitate placement.
- B. Tackifier: Powdered Organic Tackifier - GUAR based.

2.10 WETLANDS FENCING:
- A. Clean Water Services approved construction sediment fencing with staking.

PART 3 - EXECUTION

3.01 GENERAL:
- A. Scheduling and Coordination: Coordinate work schedule with Owner's Project Representative where cooperation with other trades or contracts is required. Be responsible for timely performance of work.

3.02 INVASIVE AND EXOTIC PLANT MATERIAL ERADICATION AND CONTROL:
- A. Remove by hand (including all roots) all invasive or exotic species such as Himalyian and Evergreen Blackberry, English Ivy, Reed Canarygrass and all other species listed by Clean Water Services.

3.03 STORM WATER FACILITY - SOIL PREPARATION/TOPSOIL DEPTH:
- A. Perform earthwork to achieve elevations as per civil grading plan with sufficient excavation to allow placement of 12 inches of specified topsoil.
- B. Following major earthwork, confirm with Schott the subgrades are approved before placement of topsoil.
- C. General: Remove large (3" and larger) stones, concrete, asphalt, or debris encountered or generated by this work from job site. Subgrade is defined as grade prior to placement of topsoil & is free of rock, concrete, asphalt, etc. Crossrip subgrade to 8"-12" depth at 18" on center each way or rototill subgrade to 8"-12" depth prior to placement of topsoil.
- D. Deposit 3 to 4 inch lift of approved topsoil over cross-ripped or rototilled subgrade. Rototill until thoroughly mixed to 6" into subgrade.
- E. Deposit balance of approved topsoil to a minimum depth of 12 inches in all landscape planting areas.
- F. Rototill 3" layer of specified Textural Soil Amendment into upper 6 inch layer of topsoil, blend thoroughly. Finish grades as per Civil Grading Plan. Compact soils to 75-85% density.

3.04 INSTALLATION OF STORM WATER FACILITY ROCK:
- A. Install specified rock as per Clean Water Services detail No. 3 - Sheet L-3.

3.05 INSTALLATION OF STORM WATER FACILITY NETTING:
- A. Install specified netting as per Clean Water Services detail No. 3 - Sheet L-3.

3.06 STAKING:
- A. Since the survivorship of each woody species needs to be determined, a color coded stake shall be placed adjacent to each plant, or planting group. The number of plants per grouping shall be noted and provided to Schott. In addition, the color codes shall be provided to Schott to assist with the monitoring efforts. The larger trees will be staked as detailed.

3.07 PLANTING TREES, SHRUBS, AND WETLAND PLANTS:
- A. Test tree and shrub planting holes for adequate drainage. Fill hole with water, if water does not drain away in 1/2 hour, do not plant and notify engineer immediately.
- B. All planting holes shall be excavated three times the diameter of the tree or shrub root ball or root system.
- C. Plant upright and face to give best appearance.
- D. Loosen and remove twine binding and burlap from around top of each ball. Pull no burlap from under balls.
  1. Stake trees immediately after this work.
  2. Refer to planting detail.
- E. Cut off cleanly all broken or frayed roots.
- F. Place and compact backfill soil mixture carefully to avoid injury to roots, and fill all voids.
- G. When hole is nearly filled, completely soak and allow water to soak away.
  1. Fill holes to finish grade and prepare for other work indicated.
  2. Provide 2" water ring at base of each tree: remove at end of contract period maintenance.

3.08 INSTALLATION OF WETLANDS FENCING:
- A. Install approved Clean Water Services construction sediment fencing along entire perimeter of wetlands boundary.

3.09 INSTALLATION OF SEED IN STORM WATER FACILITY - SIDE SLOPES:
- A. Seedbed Preparation:
  1. Immediately prior to seeding, bring areas to an even, smooth machine grade, removing all hard or soft areas and removing irregularities that impede surface drainage or cause puddling. A minimum of 1/2 inch to a maximum of 1 inch of the surface shall be in a loose friable condition.
  2. Seed specified seed mix at rate of 1 lb. per 1000 SF. Lightly rake seed bed to cover seed evenly over all areas at a depth not to exceed 1/4 inch.
  3. Irrigate immediately after raking with fine droplet sprinklers to wet surface and slowly penetrate soil to several inch depth without eroding surface soils. Maintain soil moisture level adequate to germinate and grow seed.
- B. Hydro seed application:
  1. Apply specified seed mix at at rate of 1 lb. per 1000 sq. ft.
  2. Apply specified mulch at rate of 2,000 lbs. per acre.
  3. Apply seed, mulch and tackifier in a one step application combining the appropriate components and weights to achieve the required rate of application.
  4. Apply mixture with a pressure spray distribution system providing a continuous, non-fluctuating discharge. The application of the hydro seed shall be by using a sweeping, horizontal motion to the device.
- C. Watering and Maintenance:
  1. Irrigate as required to maintain soil moisture adequate to germinate and grow seed.
  2. Contractor is responsible to provide adequate soil moisture to grow and maintain grass in vigorous healthy condition providing full uniform coverage until acceptance by Schott.

3.10 INSTALLATION OF SEED IN STORM WATER FACILITY - BOTTOM:
- A. Seed specified seed mix at rate of 1 lb. per 4000 SF. over pond bottom and 2' up side slope.

3.11 FINAL ACCEPTANCE AND INSPECTION:
- A. Folowing completion of all the bove items and with Schott's approval, a pre-warranty acceptance of the project will be granted. From this date forward, for a period of two years, the landscape planting warranty will be in effect. All maintenance as indicated of seeded and planted areas during the guarantee period will be by the contractor and will include items as indicated to fully establish all seeded and planted areas to a healthy vigorous state.

3.12 CONTRACT PERIOD MAINTENANCE:
- A. Begin immediately after planting of any type and continue for two years after final written acceptance by Schott.
- B. Plantings and Seeded Areas:
  1. Irrigate as required to establish plant materials.
  2. Reset plants to proper grade or alignment.
  3. Maintain areas free of invasive and exotic plant material.
  4. Any action necessary to promote new plant establishment.
  5. Replacement of immediate transplant losses.
  6. Adjustment of tree staking.
  7. Re seed bare areas as required.

END OF SECTION 02950

APPROVED CONSTRUCTION PLANS
(See cover sheet approval for any conditions)
City of Sherwood
Engineering Division
Date: 7/1/13

REGISTERED 74 OREGON LANDSCAPE ARCHITECT

CHRISTOPHER FRESHLEY
LANDSCAPE ARCHITECT

PERMIT SET

LANGER FARMS
SUBDIVISION
SHERWOOD — OREGON
TAX LOT 300 — WASHINGTON COUNTY TAX MAP 2S 1 29D

LANDSCAPE AND IRR. SPECIFICATIONS

AKS ENGINEERING & FORESTRY
ENGINEERING • PLANNING
SURVEYING • FORESTRY
13910 SW GALBREATH DR., SUITE 100
SHERWOOD, OR 97140
PHONE: (503) 925-8799
FAX: (503) 925-8969

DESIGNED BY:	
DRAWN BY:	CF
CHECKED BY:	CF
DRAWING NO.:	2929CXMPL
SCALE:	AS NOTED

PREPARED FOR:
LANGER FAMILY, LLC
14908 SW TUALATIN-SHERWOOD RD
SHERWOOD, OR 97140

DATE: 2.7.2013

JOB NUMBER

SHEET
L4

VEGETATED CORRIDOR PLANT LEGEND
Final Enhancement/Mitigation Planting Plan (143,164 SF)

SYMBOL

COMMON NAME / BOTANICAL NAME	PLANT TYPE	WATER REQUIRE-MENTS	LIGHT REQUIRE-MENTS	MIN. SIZE	MIN. HEIGHT	ON-CENTER SPACING	SPACING	QTY.
TREES								
Douglas Fir *Pseudotsuga menziesii*	Tree	Dry	Sun	2 Gal.	3'	10'	SINGLE	340
Western Red Cedar *Thuja plicata*	Tree	Moist	Sun	1 Gal.	3'	10'	SINGLE	335
Bitter Cherry *Prunus emarginata*	Tree	Moist	Part	2 Gal.	2'	10'	SINGLE	340
Beaked Hazelnut *Rhamnus purshiana*	Tree	Dry	Part	2 Gal.	2'	10'	SINGLE	200
Douglas Hawthorne *Crataegus douglasii*	Tree	Moist	Part	2 Gal.	2'	10'	CLUSTER	200
SHRUBS								
Tall Oregon Grape *Mahonia aquifolium*	Shrub	Dry	Sun	1 Gal.	6"	4'	SINGLE	1800
Indian Plum *Oemleria cerasiformis*	Shrub	Moist	Shade	2 Gal.	2'	4'	CLUSTER	1400
Snowberry *Symphoricarpos albus*	Shrub	Dry	Sun	1 Gal.	1.5'	4'	CLUSTER	2086
Nootka Rose *Rosa nootkai*	Shrub	Dry	Part	1 Gal.	1.5'	4'	CLUSTER	1920
Native California Brome *Bromus carinatus*	Grass	Dry	Part	Seed	n/a	Variable	10lbs. pls	
Blue Wildrye *Elymus glaucus*	Grass	Dry	Part	Seed	n/a	Variable	10lbs. pls	

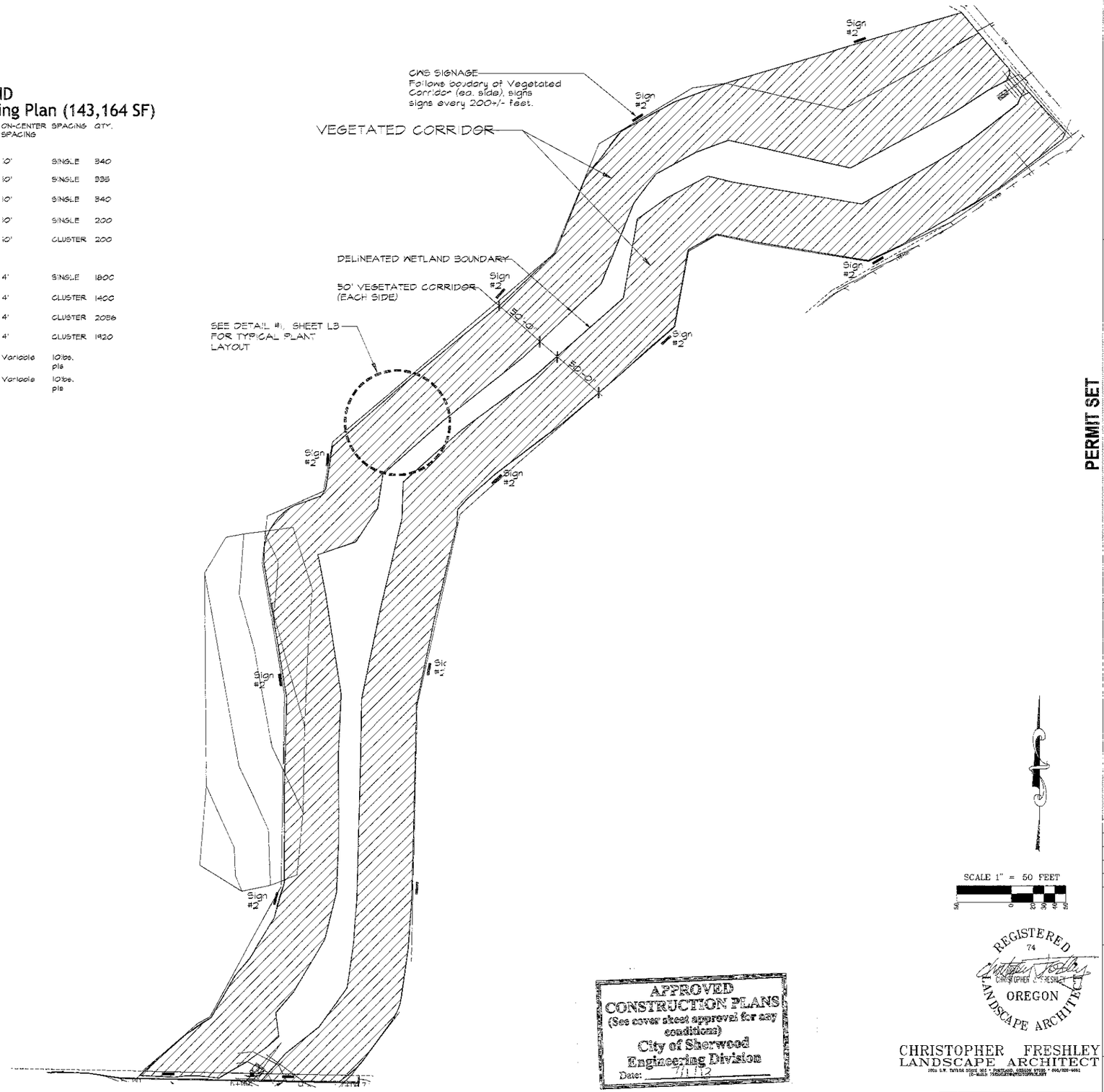

APPROVED
CONSTRUCTION PLANS
(See cover sheet approval for any conditions)
City of Sherwood
Engineering Division
Date: 7/11/13

SCALE 1" = 50 FEET

REGISTERED 74 CHRISTOPHER J. FRESHLEY OREGON LANDSCAPE ARCHITECT

CHRISTOPHER FRESHLEY
LANDSCAPE ARCHITECT
10016 S.W. TAYLOR STREET, #C4 • PORTLAND, OREGON 97225 • 503/326-9661
(E-MAIL: FRESHLEY@PROTOPWLAND.NET)

LANDSCAPE PLAN

PERMIT SET

LANGER FARMS
SUBDIVISION
SHERWOOD OREGON
TAX LOT 300
WASHINGTON COUNTY TAX MAP 2S 1 29D

AKS ENGINEERING & FORESTRY
ENGINEERING • PLANNING
SURVEYING • FORESTRY
13910 SW GALBREATH DR., SUITE 100
SHERWOOD, OR 97140
PHONE: (503) 925-8799
FAX: (503) 925-8969

DESIGNED BY:	
DRAWN BY:	CF
CHECKED BY:	CF
DRAWING NO.:	2929CXMPL
SCALE:	AS NOTED

PREPARED FOR:
LANGER FAMILY, LLC.
14958 SW TUALATIN-SHERWOOD RD.
SHERWOOD, OR 97140

DATE: 2.7.2013
Rev.2.27.2013

JOB NUMBER

SHEET
L5

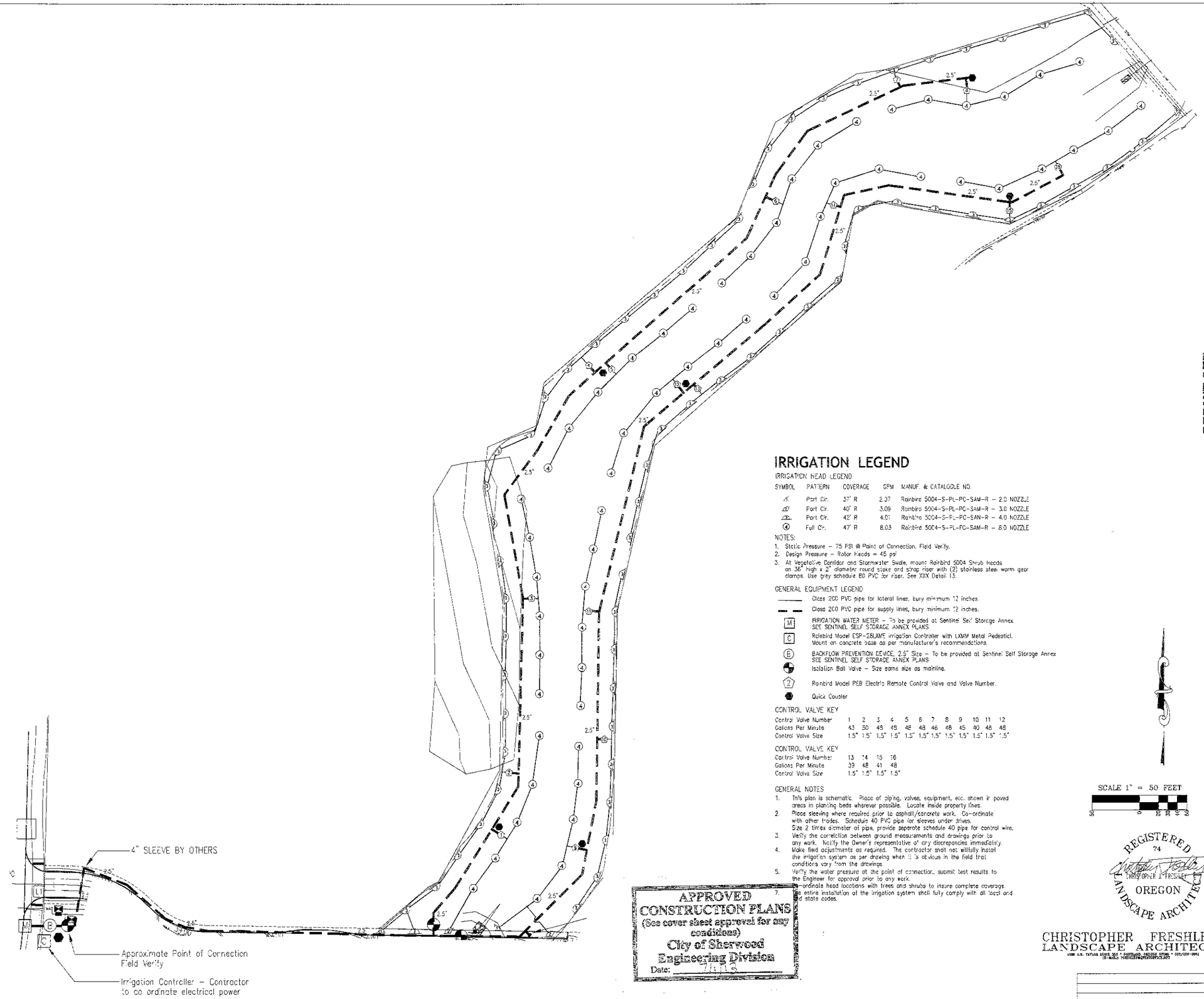

IRRIGATION LEGEND

IRRIGATION HEAD LEGEND

SYMBOL	PATTERN	COVERAGE	GPM	MANUF. & CATALGOLE NO.
	Part Cir.	37' R	2.07	Rainbird 5004–S–PL–PC–SAM–R – 2.0 NOZZLE
	Part Cir.	40' R	3.09	Rainbird 5004–S–PL–PC–SAM–R – 3.0 NOZZLE
	Part Cir.	42' R	4.01	Rainbird 5004–S–PL–PC–SAM–R – 4.0 NOZZLE
4	Full Cir.	47' R	8.03	Rainbird 5004–S–PL–FC–SAM–R – 8.0 NOZZLE

NOTES:

1. Static Pressure – 75 PSI @ Point of Connection. Field Verify.
2. Design Pressure – Rotor Heads = 45 psi
3. At Vegetative Corridor and Stormwater Swale, mount Rainbird 5004 Shrub Heads on 36" high x 2" diameter round stake and strap riser with (2) stainless steel worm gear clamps. Use grey schedule 80 PVC for riser. See XXX Detail 13.

GENERAL EQUIPMENT LEGEND

- Class 200 PVC pipe for lateral lines, bury minimum 12 inches.
- Class 200 PVC pipe for supply lines, bury minimum 12 inches.
- M — IRRIGATION WATER METER – To be provided at Sentinel Self Storage Annex SEE SENTINEL SELF STORAGE ANNEX PLANS
- C — Rainbird Model ESP–SMOWC Irrigation Controller with LXMM Metal Pedestial. Mount on concrete base as per manufacturer's recommendations.
- B — BACKFLOW PREVENTION DEVICE, 2.5" Size – To be provided at Sentinel Self Storage Annex SEE SENTINEL SELF STORAGE ANNEX PLANS
- Isolation Ball Valve – Size same size as mainline.
- 2 — Rainbird Model PEB Electric Remote Control Valve and Valve Number.
- Quick Coupler

CONTROL VALVE KEY

Control Valve Number	1	2	3	4	5	6	7	8	9	10	11	12
Gallons Per Minute	43	50	48	48	48	48	46	48	45	40	48	48
Control Valve Size	1.5"	1.5"	1.5"	1.5"	1.5"	1.5"	1.5"	1.5"	1.5"	1.5"	1.5"	1.5"

CONTROL VALVE KEY

Control Valve Number	13	14	15	16
Gallons Per Minute	39	48	41	48
Control Valve Size	1.5"	1.5"	1.5"	1.5"

GENERAL NOTES

1. This plan is schematic. Place all piping, valves, equipment, ecc. shown in paved areas in planting beds wherever possible. Locate inside property lines.
2. Place sleeving where required prior to asphalt/concrete work. Co–ordinate with other trades. Schedule 40 PVC pipe for sleeves under drives. Size 2 times diameter of pipe, provide separate schedule 40 pipe for control wire.
3. Verify the correlation between ground measurements and drawings prior to any work. Notify the Owner's representative of any discrepancies immediately.
4. Make field adjustments as required. The contractor shall not willfully install the irrigation system as per drawing when it is obvious in the field that conditions vary from the drawings.
5. Verify the water pressure at the point of connection., submit test results to the Engineer for approval prior to any work.
6. Co–ordinate head locations with trees and shrubs to insure complete coverage.
7. The entire installation of the irrigation system shall fully comply with all local and state codes.

APPROVED
CONSTRUCTION PLANS
(See cover sheet approval for any conditions)
City of Sherwood
Engineering Division
Date: 7/11/13

SCALE 1" = 50 FEET

REGISTERED 74 CHRISTOPHER J. FRESHLEY OREGON LANDSCAPE ARCHITECT

CHRISTOPHER FRESHLEY
LANDSCAPE ARCHITECT
1000 S.W. TAYLOR SUITE 365 • PORTLAND, OREGON 97205 • (503)222-0961
E-MAIL: CHRIS@CHRISFRESHLEY.COM

IRRIGATION PLAN

PERMIT SET

LANGER FARMS
SUBDIVISION
SHERWOOD OREGON
TAX LOT 300
WASHINGTON COUNTY TAX MAP 2S 1 29D

AKS ENGINEERING & FORESTRY
ENGINEERING · PLANNING
SURVEYING · FORESTRY
13910 SW GALBREATH DR.,
SUITE 100
SHERWOOD, OR 97140
PHONE: (503) 925-8799
FAX: (503) 925-8969

DESIGNED BY:	
DRAWN BY:	CF
CHECKED BY:	CF
DRAWING NO:	2929CKMPL
SCALE:	AS NOTED

PREPARED FOR:
LANGER FAMILY, LLC.
14955 SW TUALATIN–SHERWOOD RD
SHERWOOD, OR 97140

DATE: 2.7.2013

JOB NUMBER

SHEET
L6

VEGETATED CORRIDOR LANDSCAPE LEGEND
(Typical Planting Layout)

SYMBOL	COMMON NAME / BOTANICAL NAME	PLANT TYPE	WATER REQUIREMENTS	LIGHT REQUIREMENTS	MIN. SIZE	MIN. HEIGHT	ON-CENTER SPACING	SPACING
TREES								
BC	Bitter Cherry *Prunus emarginata*	Tree	Moist	Part	2 Gal.	2'	10'	SINGLE
BH	Beaked Hazelnut *Rhamnus purshiana*	Tree	Dry	Part	2 Gal.	2'	10'	SINGLE
DF	Douglas Fir *Pseudotsuga menziesii*	Tree	Dry	Sun	2 Gal.	3'	10'	SINGLE
DH	Douglas Hawthorne *Crataegus douglasii*	Tree	Moist	Part	2 Gal.	2	10'	CLUSTER
WRC	Western Red Cedar *Thuja plicata*	Tree	Moist	Sun	1 Gal.	3'	10'	SINGLE
SHRUBS								
IP	Indian Plum *Oemleria cerasiformis*	Shrub	Moist	Shade	2 Gal.	2'	4'	CLUSTER
SB	Snowberry *Symphoricarpos albus*	Shrub	Dry	Sun	1 Gal.	1.5'	4'	CLUSTER
TOG	Tall Oregon Grape *Mahonia aquifolium*	Shrub	Dry	Sun	1 Gal.	6"	4'	SINGLE
NR	Nootka Rose *Rosa nootkai*	Shrub	Dry	Part	1 Gal.	1.5'	4'	CLUSTER

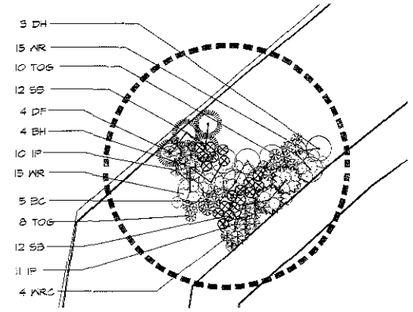

TYPICAL PLANTING LAYOUT

1 VEGETATED CORRIDOR LEGEND AND TYP. LAYOUT
SCALE: 1" = 30'

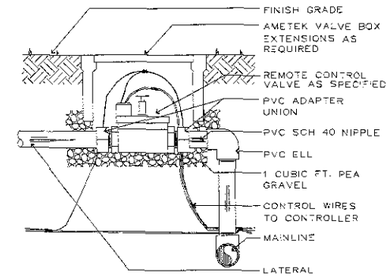

3 ELECTRIC VALVE ASSEMBLY
SCALE: NTS

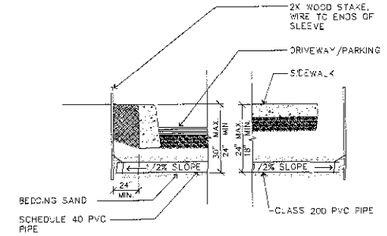

6 SLEEVE
SCALE: NTS

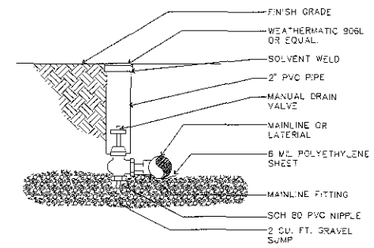

4 MANUAL DRAIN VALVE
SCALE: NTS

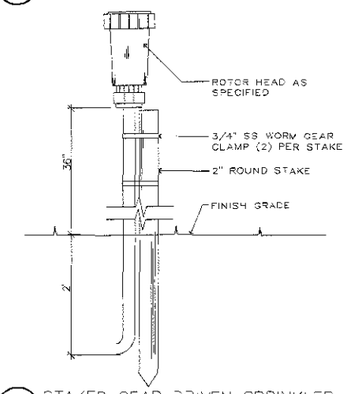

7 STAKED GEAR DRIVEN SPRINKLER
SCALE: NTS

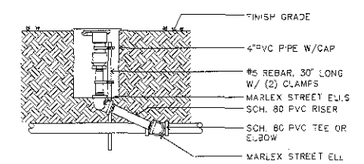

5 QUICK COUPLER
SCALE: NTS

GALLON PER MINUTE		PIPE SIZE & CLASS	
0 - 10	GALLONS	3/4"	CLASS 200
11 - 15	GALLONS	1"	CLASS 200
16 - 25	GALLONS	1 1/4"	CLASS 200
26 - 40	GALLONS	1 1/2"	CLASS 200
41 - 55	GALLONS	2"	CLASS 200
56 - 85	GALLONS	2 1/2"	CLASS 200
86 - 125	GALLONS	3	CLASS 200

8 PIPE SIZE SCHEDULE – Lateral Lines
SCALE: NTS

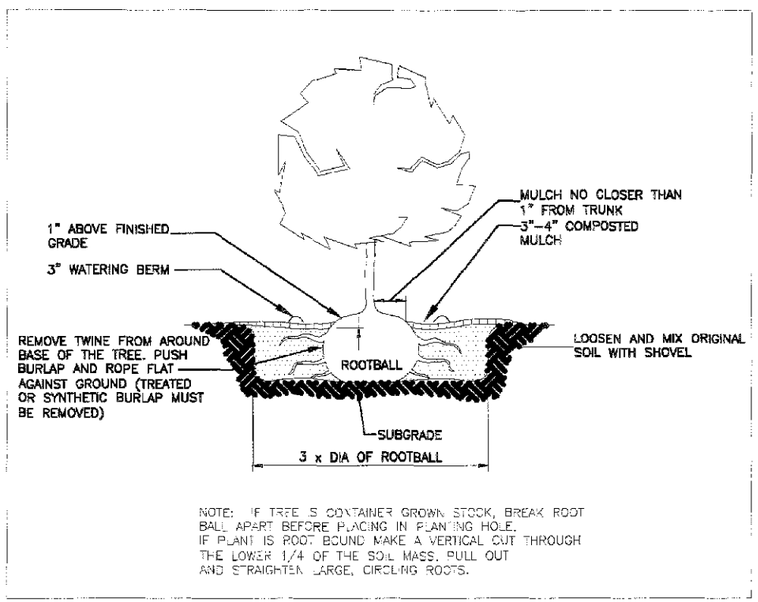

NOTE: IF TREE IS CONTAINER GROWN STOCK, BREAK ROOT BALL APART BEFORE PLACING IN PLANTING HOLE. IF PLANT IS ROOT BOUND MAKE A VERTICAL CUT THROUGH THE LOWER 1/4 OF THE SOIL MASS. PULL OUT AND STRAIGHTEN LARGE, CIRCLING ROOTS.

2 TREE PLANTING–CONTAINER/BURLAPPED
CLEAN WATER SERVICES-DRAWING NO. 780
SCALE: NTS

12"X18" SIGNS SHALL BE PLACED IN A MANNER AS TO CLEARLY IDENTIFY THE SENSITIVE AREA AND VEGETATED CORRIDOR AS WELL AS AT ALL POINTS OF ENTRY SUCH AS THE BEGINNING OF PATHS, TRAIL HEADS AND ANY PLACE THAT THE PUBLIC MAY WANT OR BE ABLE TO ENTER AREA.

SIGN #1

8"X8" SIGNS SHALL BE USED FOR AREAS WHERE A LARGE NUMBER OF SIGNS ARE NEEDED SUCH AS THE BACK OR SIDE YARDS ON EACH LOT ADJACENT TO THE SENSITIVE AREA OR VEGETATED CORRIDOR IN NEW SUBDIVISIONS OF PARKTZONE.

SIGN #2

9 VEGETATED CORRIDOR SIGNAGE: 1 AND 2
CLEAN WATER SERVICES-DRAWING NO. 790
SCALE: NTS

APPROVED
CONSTRUCTION PLANS
(See cover sheet approval for any conditions)
City of Sherwood
Engineering Division
Date: 1/1/13

REGISTERED 74 CHRISTOPHER A. FRESHLEY OREGON LANDSCAPE ARCHITECT

CHRISTOPHER FRESHLEY
LANDSCAPE ARCHITECT
1205 S.W. TAYLOR TRAIL DR. • PORTLAND, OREGON 97221 • 503/292-1951
(E-MAIL: FRESHLEY@FREESTYLE.NET)

LANDSCAPE AND IRRIGATION DETAILS

PERMIT SET

LANGER FARMS SUBDIVISION
SHERWOOD OREGON
TAX LOT 300
WASHINGTON COUNTY TAX MAP 2S 1 29D

AKS ENGINEERING & FORESTRY
ENGINEERING • PLANNING
SURVEYING • FORESTRY
13910 SW GALBRAITH DR.,
SUITE 100
SHERWOOD, OR 97140
PHONE: (503) 925-8799
FAX: (503) 925-8969

DESIGNED BY:	
DRAWN BY:	CC
CHECKED BY:	CC
DRAWING NO.:	2929CKMPL
SCALE:	AS NOTED

PREPARED FOR:
LANGER FAMILY, LLC.
14856 SW TUALATIN-SHERWOOD RD
SHERWOOD, OR 97140

DATE: 2.7.2013
Rev.2.27.2013

JOB NUMBER

SHEET
L7

SECTION 02750 IRRIGATION

PART 1 - GENERAL

1.01 SCOPE: Furnish labor, material, equipment and services necessary for installation of new irrigation system as shown on drawings and specified herein.

1.02 RELATED WORK IN OTHER SECTIONS:
A. Section 02950 - LANDSCAPING

1.03 RELATED WORK BY OTHERS:
A. Water meter at point of connection.
B. Backflow Prevention device. Landscape Contractor to coordinate with appropriate trades.
C. Provisions for electrical service to controller. Landscape Contractor to coordinate with appropriate trades.

1.04 QUALITY ASSURANCE:
A. Supervision: Provide at least one person who shall be present at all times during execution of this portion of work and who shall be thoroughly familiar with the type of materials being installed and the manufactrer's recommended, methods of installation and who shall direct all work performed under this section.
B. Restrictions: Conform to the "Uniform Plumbing Code" as adopted and modified by the state of Oregon and all legally constituted authorities having jurisdiction.
C. Materials and Equipment: New materials and equipment of brands as indicated on drawings and specified herein.

1.05 DESIGN AND PLAN:
A. Layout of irrigation system is schematic.
B. Follow as closely as possible.

1.06 VERIFICATION OF EXISTING CONDITIONS:
A. Before proceeding with the installation of any section of the irrigation system, verify all existing conditions including all utilities and easements.

1.07 VERIFICATION OF DIMENSIONS:
A. Before proceeding with the installation of any section of the irrigation system, check and verify correlation between ground measurements and Drawings.
B. Advise Engineer of discrepancies before proceeding.

1.08 VERIFICATION OF WATER PRESSURE:
A. Verify water pressure at point of connection.
B. Submit pressure test results to Engineer for approval prior to any work.

1.09 PROTECTION OF UNFINISHED WORK:
A. Protect work at all times.
B. Keep rock, dirt, gravel, debris and foreign materials from entering piping, valves and other irrigation equipment.

1.10 ENVIRONMENTAL CONDITIONS:
A. No solvent welding of PVC pipe in freezing weather.
B. Solvent welding of PVC pipe under cover only during rainy weather.

1.11 UTILITIES:
A. Be responsible for location of underground utilities and easements.
B. Protect active utilities. If encountered, notify persons owning same.

1.12 STORAGE:
A. Store on job site only as approved.
B. Be responsible for security and protection.
C. Store no PVC pipe nor fittings in direct sunlight.

1.13 EQUIPMENT FOR OPERATION:
A. Provide Owner with the following operation equipment.
B. Turn over to Owner at time of Final Inspection.
1. (2) Keys for irrigation controller.
2. (2) snap-lock unlocking tools-for valve box covers.
3. (2) quick coupling valve coupler.
4. (2) hose swivel.
5. (2) lock cap key, Rain Bird 2049.
6. (2) valve operating key, 30-inch handle length.

1.14 RECORD DRAWINGS:
A. Maintain current with work progress, one red pencil marked print showing all deviations from drawings occurring during installation.
B. Show locations of stubouts, manual drains, pipe lines or other subsurface features as installed.
C. Show dimension reference from subsurface features to permanent structural or surface elements.
D. Submit reproducible print at end of project.
E. Place 1 reduced size laminated print inside controller door.

1.15 SUBMITTALS:
A. Submit to Engineer within 30 days after award of contract. Product data including but not limited to:
1. Irrigation Controller, control valves, pipe, fittings, heads, control wire, wire splices, vavle boxes, solvent cement, drain vavles, gate valves and all others products necessary for complete system.
2. Static water pressure at point of connection.

B. Submit to Engineer at time of inspection for final approval.
1. As-Built irrigation print.
2. Copy of guarantees, warranties or affidavits applicable to equipment or materials beyond Contractor's 1-year guarantee period.
3. Manufacturers catalog cuts describing all equipment and materials used.
4. Names, addresses and phone numbers of manufacturers and local suppliers of equipment.
5. Written operating and maintenance instructions for all electrical or mechanical equipment used.
C. Submit three (3) complete copies of the above submittals in hard cover binder.

1.16 GUARANTEE:
A. Guarantee the irrigation system, or any part thereof, against defective material or workmanship for one (1) year from the date of acceptance. acceptance.
B. Repair any settling of backfilled trenches occurring during a one (1) year period after final acceptance.
C. Include restoration of planting, paving or other improvements of any kind associated with corrections.
D. Make corrections without expense to Owner.

PART 2 - PRODUCTS

2.01 GENERAL:
A. New materials and equipment.
B. Brands and types as specified herein.
C. Substitutions or equals only by written approval of the Engineer.

2.02 IRRIGATION HEADS:
A. Construction as specified by model number reference.
B. Manufacturer's catalog numbers indicated on plan.

2.03 PIPE AND FITTINGS:
A. PVC Pipe Mainline: PVC pipe, Polyvinyl Chloride Plastic PVC 1120, Class 200, Type 1, normal impact, I.P.S., NSF approved plain and/or bell ends color white; meeting requirements ASTM D2241 and D1784.
B. PVC Pipe Laterals: PVC pipe, Polyvinyl Chloride Plastic PVC 1120, Class 200, Type 1, normal impact, I.P.S., NSF approved plain and/or bell ends color white; meeting requirements ASTM D2241 and D1784.
C. PVC Pipe Fittings: PVC 1120, Schedule 40, Type 1, normal impact, I.P.S., NSF approved; meeting requirements of ASTM D 2466-74.
D. Galvanized Pipe and Fittings: Standard weight pipe, hot dipped galvanized and threaded. Threaded cast iron or galvanized malleable fittings.
E. PVC Riser: PVC 1120, Type 1, normal impact I.P.S., NSF approved Schedule 80 PVC, conform to PS 21-70. Cut to required lengths threaded both ends, color dark grey.

2.04 SLEEVES:
A. Under road - Provided by others.

2.05 PVC SOLVENT CEMENT:
A. NSF approved solvent for PVC to 4" pipe size.
B. Meeting requirements of ASTM D 2564-73a, #705.

2.06 PVC PRIMER AND CLEANER: Weld-on P-70 or equal.

2.07 ISOLATION BALL VALVE: Watts series WBV forged brass ball valve, standard port, 400 WOG.

2.08 MANUAL DRAIN VALVE: Brass globe valve, 1/2" size with cross-type wheel.

2.09 QUICK-COUPLING VALVE:
A. One piece, double slot, 3/4" inlet with vinyl cover and lock top.
B. Rain Bird Model or equal.

2.10 QUICK-COUPLING VALVE KEY: Rain Bird or equal.

2.11 LOCK CAP KEY: Rain Bird or equal.

2.12 HOSE SWIVEL: Rain Bird or equal.

2.13 LOCKING LID AND KEY:
A. Rainbird or equal.

2.14 VALVE BOX: "Ametek" Economy, Standard and Jumbo sized boxes, extensions and locking covers where applicable.

2.15 DRAINAGE ROCK: 1-1/2 inch minus clean, washed round rock.

2.16 REMOTE CONTROL VALVE:
A. Refer to drawing.

2.17 BACKFLOW PREVENTION DEVICE:
A. Provided by other.

2.18 CONTROL WIRE: Type UF bearing UL label for direct underground burial, NEC Class II circuits. AWG sizes, Refer to sizing chart, follow manufacturer's recommendations

2.19 ELECTRIC CONNECTORS: 3M DBY splice connectors.

PART 3 - EXECUTION

3.01 GENERAL:
A. Install materials and equipment in strict accordance with manufacturer's written specification and recommendations.
B. Comply with local and state codes.
C. Maintain job premises clean and free from accumulations of debris or disorder at all times. Remove equipment and surplus materials from each area of work as completed.
D. Leave no work in condition that would jeopardize other persons or property.
E. Conduct mainline pressure test prior to backfilling in presence of Owner's Representative. Test at 100 static pressure. Test is acceptable if no more than 5psi loss after 1 hour.

3.02 TRENCH EXCAVATION:
A. Straight or "snaked" slightly.
B. Slope bottom uniformly, 1/2% minimum grade to drain.
C. Trench depth 12 inches minimum (lateral lines), 18 inches minimum (supply lines), & 24 inches maximum depth; bottoms free from sharp rock or objects that may damage pipe.
D. Trench width sufficient to allow proper tamping of backfill around pipe.
E. Keep topsoil separate from subsoils. Replace in order of removal.

3.03 TRENCH BACKFILL:
A. Do no backfilling until approval of pressure test.
B. Use excavated soil or specified backfill sand bedding materials.
C. Material free from rock and/or debris that may damage pipe or prevent proper compaction.
D. Place 6-inch maximum lifts and compact thoroughly.
E. Place mainline backfill only when pipe is filled with water; 25 PSI pressure minimum.

3.04 INSTALLATION OF PIPE:
A. Sizes, type as specified.
1. Lay with support beneath entire lengths.
2. Slope all pipe to gravity drain.
3. Snake PVC piping to allow for expansion and contraction.
4. Combine runs in common trench where feasible with 3-inch minimum separation.
5. Flush lines prior to installation of valves and irrigation heads.

B. Cutting and Joining:
1. Cut pipe square, debur and remove all surface contaminants or moisture.
2. Chamfer all cut ends.
3. Apply primer and solvent cement in accordance with manufacturers recommendations.
4. Make threaded joints leak resistant, with freedom of movement.
5. Use teflon thread sealant for threaded joints.
6. Clean out threads and use tape or compound joint sealants for all galvanized pipe connections. Leave no more than two (2) threads showing at joints.

3.05 INSTALLATION OF SLEEVING:
A. Sleeving provided by others.

3.06 INSTALLATION OF VALVES:
A. Types, sizes and locations as shown on drawings and equipment legend.
1. Install in accordance with details for each type.
2. Install manual drain valves at locations to completely drain all main lines.
3. Install minimum one manual drain per zone.

3.09 INSTALLATION OF IRRIGATION HEADS:
A. Types and locations as indicated on drawings; Install in accordance with details for each type.
B. Adjust and balance:
1. Adjust and balance each system zone.
2. Achieve uniform area coverage by all head types.

3.10 INSTALLATION OF CONTROL WIRE:
A. For wire sizes, refer to wire sizing chart published by manufacturer of control valves.
B. Use specified electrical connectors at all splices. Place all splices in valve boxes, and note locations on as-built record drawings.
C. Bundle wire together with electrical tape at 10-foot intervals. Provide 12-inch expansion coils every 100 feet where runs exceed this length.
D. Place wire at bottom of pipe runs to provide protection.
E. Provide two extra wires running continuously to each control valve similar to common for use if wire fails, color to be different. Label as "extra wire" at controller.
F. Provide (9) extra control wires to Sentinel Self Storage Facility as shown on the drawings.

END OF SECTION

SECTION 02950 LANDSCAPING

PART 1 - GENERAL

1.01 SCOPE OF WORK: Placement of on-site stockpiled &/or imported topsoil; site and soil preparation; establishment of fine finish grading; installation of landscape construction details; supply and installation of trees, shrubs, wetland plantings and seeding; mulching of planting bed areas; and maintenance and warranty of planted areas.

1.02 QUALITY ASSURANCE: All plant material and planting locations are to be approved by a wetlands biologist or mitigation specialist from Schott & Associates prior to planting. During planting, Schott is to be on site.

1.03 COORDINATION: Coordinate placement of on-site stockpiled topsoil and quantity required with General Contractor.

1.04 PLANT MATERIAL: Provide in accordance with species, sizes, and quantities indicated on the drawings.
A. Plant substitution is not permitted. The specified seed mix in the plant schedule is to be adhered to and used for all areas designated.
B. Furnish certificate of compliance with indicated seed mixture and any certificates of inspection and and compliance as required by Federal and State laws and regulations for plant and soil additives.

1.05 GUARANTEE AND REPLACEMENT:
A. Guarantee plant materials and related workmanship of installation, beginning after written acceptance of work, for two years from the date of planting. Any planted material (woody, herbaceous, or seeded) which proves to be other than specified or is not in vigorous condition within a period of one year from acceptance of the work will be replaced by the Contractor without cost to the Owner. An 80% minimum survival rate is expected after five years.
1. Replace plant material not surviving or in poor condition during guarantee period.
2. Correct deficiencies in soil or drainage conditions when attributable to plant losses, prior to replacement.
3. Perform all replacement work in accordance with original specifications at no additional cost to Owner.
4. Damage or loss of plant materials due to vandalism, freezing, or acts of neglect by others, is exempt from Contractor's replacement responsibility.
B. Perform replacement work when requested by Owner within fourteen (14) days after notification.
1. Plant replacements subject to seasonal limitations may be performed at a later date when, in the judgement of the Engineer, survival of replacements is jeopardized by weather or other conditions.
2. Advise Owner or Owner's Representative in writing when replacement work is performed. Include specific instructions for immediate care of same.

1.06 SUBMITTALS:
A. Submit 1 quart sample of textural soil amendment and mulch to Engineer for review.
B. Submit product data for soil amendments.
C. Submit product data for Vegetated Corridor signage staking material and fasteners.
D. Submit product data for wetlands construction sediment fencing and staking materials.
E. Submit product data for all seed mixs.
F. Submit product data for Hydro Seed components including but not limited to: tackifier, organic component, mixture color and proposed applicator.
G. Submit product data for all Erosion Control Netting and fasteners.
H. Submit list of all plant materials, sizes suppliers, etc.

1.07 SITE CONDITIONS/DAMAGE/CLEANUP:
A. Place construction sediment fence per Clean Water Services standards between existing wetlands and new construction areas in Vegetated Corridor. Fence shall remain in place until planted vegetation is established as determined by Schott and/or the permitting agency. Once the vegetation is established, the construction sediment fence shall be removed.
B. Locate all underground utilities prior to digging or driving stakes.
C. Any existing buildings, equipment, underground utilities, walks, roads, and/or forms damaged by the Contractor are to be replaced and/or repaired at the Contractor's expense, in a manner satisfactory to the Owner's representative before final payment is made.
D. The Contractor is to be responsible for keeping planted areas free of debris, rock and sand throughout the course of work. Upon completion of the contract, the Contractor's to remove all surplus material, equipment, and debris from the site. All planted areas are to be rake-clean.

1.08 SCHEDULE:
A. Any earthwork must be approved by the project representative prior to commencement of such work. At that time, it will be determined what extra measures, if any, should be taken to prevent damage due to earthwork in saturated soils.
B. Planting is to occur during the cool season months (November to March) to take advantage of seasonal rains and the greater availability of plant material.

1.09 EXISTING VEGETATION:
A. Protect all existing native vegetation as listed in the most current version of Metro or Native Plant List, whichever is more comprehensive. Any existing vegetation damaged by Contractor will be replaced with plants of equal or better size and condition at contractor's expense.

PART 2 - PRODUCTS

2.01 TEXTURAL SOIL AMENDMENTS:
A. Soil amendment is to consist of screened mill-run fir and/or hemlock sawdust blended with composted manure or air digested sewage sludge. The blended ingredients are to be composted to a minimum of one year. Bassett Western Fertil - Mulch or approved equal.

2.02 MULCH MATERIAL:
A. Free from contaminants, noxious weed seed, mushrooms, and all foreign materials harmful to plant life.
1. Shredded wood and/or bark.

2.03 PLANT MATERIALS:
A. General, species, variety, quantity and size.
1. As indicated on the plans.
2. Nomenclature - conform to names given in Standardized Plant Names, 1942 edition or that accepted in localized nursery trade.
3. Meet requirements of American Standard for Nursery Stock, 1973 edition A.N.S.I. Z60.1
B. Rooted plants are to be first quality, well-foliated, with well-developed root systems, and normal well-shaped trunks, limbs, stems, and heads. Schott will approve for quality conformance. All rooted plant material is to be labeled by genus, species and variety. Plants deemed unsuitable may be rejected before or after delivery. All plant material is to be free from damage, disease, insects, insect eggs and larvae.

2.04 SEEDING MATERIALS:
A. Vegetated Corridor Seed Mix:
1. As indicated on the plans.

2.05 TOPSOIL:
A. Topsoil is defined as material being a friable loam surface soil found at a depth, in its natural state, of less than 18". Topsoil shall be free from subsoil, clay lumps larger than 2 inches, debris, turf, weeds, roots, contaminants, or other objectionable material.
Topsoil on site meeting these specifications may be used. Furnish additional topsoil to match existing if on-site topsoil quantities are insufficient at no additional cost at no additional cost to owner.

2.06 WATER:
A. Metered domestic service for Contractor's use is provided on site.
B. Be responsible for conveying any application equipment required to perform the work.

2.07 HYDRO MULCH MATERIALS:
A. Mulch: 100% virgin wood fiber or wood cellulose fiber mulch from Douglas Fir or Western Hemlock dyed to facilitate placement.
B. Tackifier: Powdered Organic Tackifier - GUAR based.

2.08 VEGETATED CORRIDOR SIGNAGE:
A. Clean Water Services standard 4"x4" Vegetated Corridor Signage with stakes and fasteners.

2.09 WETLANDS FENCING:
A. Clean Water Services approved construction sediment fencing with staking.

PART 3 - EXECUTION

3.01 GENERAL:
A. Scheduling and Coordination: Coordinate work schedule with Owner's Project Representative where cooperation with other trades or contracts is required. Be responsible for timely performance of work.

3.02 INVASIVE AND EXOTIC PLANT MATERIAL ERADICATION AND CONTROL:
A. Remove by hand (including all roots) all invasive or exotic species such as Himalyian and Evergreen Blackberry, English Ivy, Reed Canarygrass and all other species listed by Clean Water Services.

3.03 VEGETATED CORRIDOR - PLANT INSTALLATION:
A. Scalping:
1. A 30 inch diameter circle will be scalped for each woody plant. Install plant in center of circle. Dig planting pit 3 times diameter of the root ball and as per Clean Water Services Planting Detail No. 780. Install 3 inch layer of specified mulch ring around plant material.

3.04 STAKING:
A. Since the survivorship of each woody species needs to be determined, a color coded stake shall be placed adjacent to each plant, or planting group. The number of plants per grouping shall be noted and provided to Schott. In addition, the color codes shall be provided to Schott to assist with the monitoring efforts. The larger trees will be staked as detailed.

3.05 PLANTING TREES, SHRUBS, AND WETLAND PLANTS:
A. Test tree and shrub planting holes for adequate drainage. Fill hole with water, if water does not drain away in 1/2 hour, do not plant and notify engineer immediately.
B. All planting holes shall be excavated three times the diameter of the tree or shrub root ball or root system.
C. Plant upright and face to give best appearance.
D. Loosen and remove twine binding and burlap from around top of each ball. Pull no burlap from under balls.
1. Stake trees immediately after this work.
2. Refer to planting detail.
E. Cut off cleanly all broken or frayed roots.
F. Place and compact backfill soil mixture carefully to avoid injury to roots, and fill all voids.
G. When hole is nearly filled, completely soak and allow water to soak away.
1. Fill holes to finish grade and prepare for other work indicated.
2. Provide 2" water ring at base of each tree; remove at end of contract period maintenance.

3.06 INSTALLATION OF VEGETATED CORRIDOR SIGNAGE:
A. Install approved Clean Water Services "Vegetated Corridor Signage" every 200 +/- feet on 2"x2" Western Red Cedar stakes and secure with Galvanized nails. Sign height at 36" above grade.

3.07 INSTALLATION OF WETLANDS FENCING:
A. Install approved Clean Water Services construction sediment fencing along entire perimeter of wetlands boundar

3.08 FINAL ACCEPTANCE AND INSPECTION:
A. Folowing completion of all the bove items and with Schott's approval, a pre-warranty acceptance of the project will be granted. From this date forward, for a period of two years, the landscape planting warranty will be in effect. All maintenance as indicated of seeded and planted areas during the guarantee period will be by the contractor and will include items as indicated to fully establish all seeded and planted areas to a healthy vigorous state.

3.09 CONTRACT PERIOD MAINTENANCE:
A. Begin immediately after planting of any type and continue for two years after final written acceptance by Schott.
B. Plantings and Seeded Areas:
1. Irrigate as required to establish plant materials.
2. Reset plants to proper grade or alignment.
3. Maintain areas free of invasive and exotic plant material.
4. Any action necessary to promote new plant establishment.
5. Replacement of immediate transplant losses.
6. Adjustment of tree staking.
7. Re seed bare areas as required.

END OF SECTION 02950

APPROVED
CONSTRUCTION PLANS
(See cover sheet approval for any conditions)
City of Sherwood
Engineering Division
Date: 7/1/13

REGISTERED 74 CHRISTOPHER A. FRESHLEY OREGON LANDSCAPE ARCHITECT

CHRISTOPHER FRESHLEY
LANDSCAPE ARCHITECT

PERMIT SET

LANDSCAPE AND IRR. SPECIFICATIONS

LANGER FARMS SUBDIVISION

SHERWOOD OREGON

TAX LOT 300 — WASHINGTON COUNTY TAX MAP 2S 1 29D

ENGINEERING · PLANNING
SURVEYING · FORESTRY
13910 SW GALBREATH DR., SUITE 100
SHERWOOD, OR 97140
PHONE: (503) 925-8799
FAX: (503) 925-8969

DESIGNED BY:	
DRAWN BY:	CF
CHECKED BY:	CF
DRAWING NO.:	2929CXMPL
SCALE:	AS NOTED

PREPARED FOR:
LANGER FAMILY, LLC.
14958 SW TUALATIN-SHERWOOD RD
SHERWOOD, OR 97140

DATE: 2.7.2013

JOB NUMBER

SHEET
L8